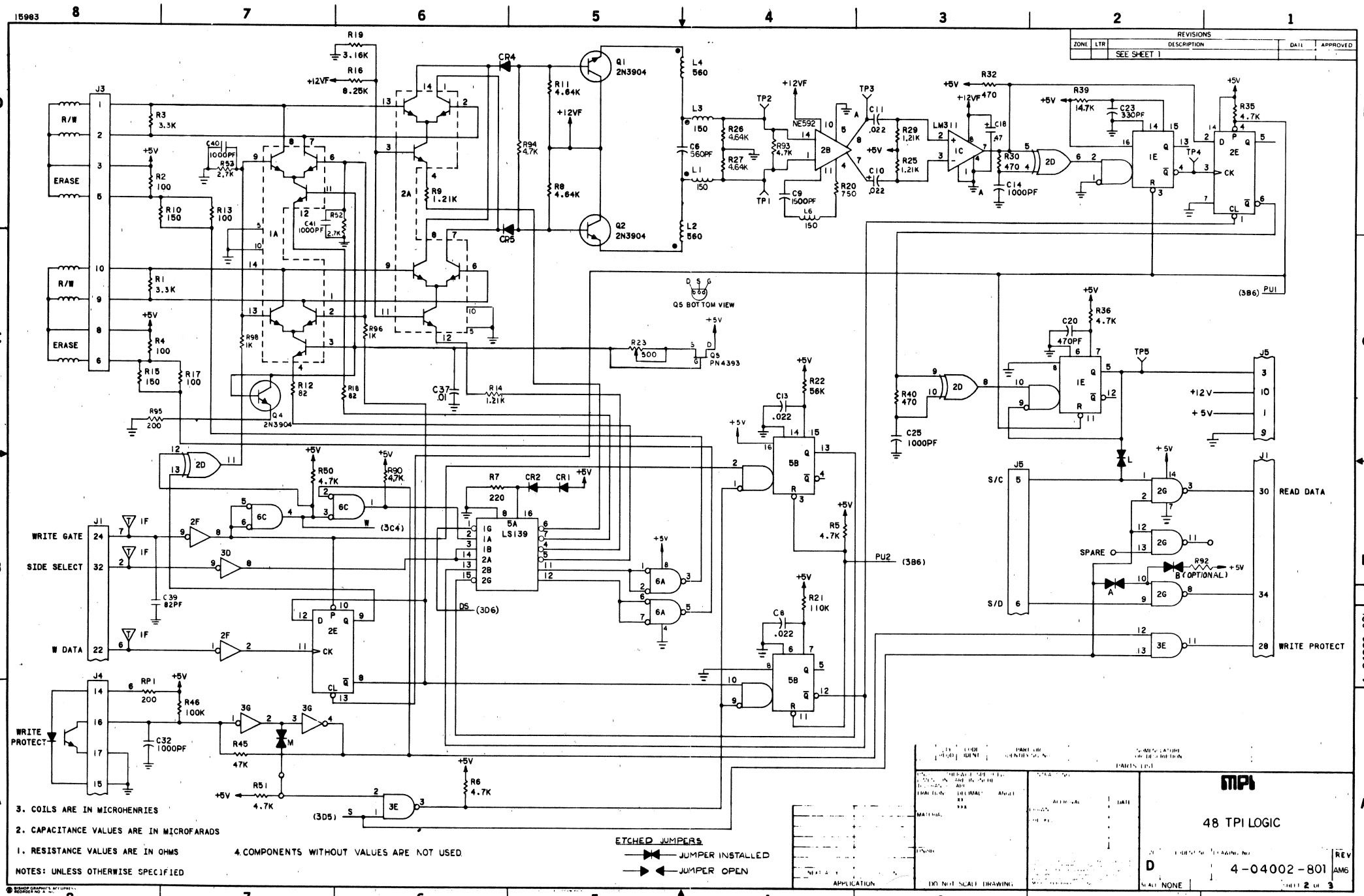

15983
REVISIONS
ZONE LTR DESCRIPTION DATE APPROVED
SEE SHEET 1
J3
R/W
ERASE
R1 3.3K
R2 100
R3 3.3K
R4 100
R10 150
R13 100
R15 150
R17 100
R95 200
R19 3.16K
R16 8.25K
+12VF
CR4
CR5
Q1 2N3904
Q2 2N3904
Q4 2N3904
R11 4.64K
R8 4.64K
R94 4.7K
R9 1.21K
R98 1K
R96 1K
R12 82
R18 82
C37 .01
R14 1.21K
L4 560
L3 150
L2 560
L1 150
C6 560PF
R26 4.64K
R27 4.64K
R93 4.7K
TP1
TP2
TP3
TP4
TP5
NE592
C9 1500PF
L6 150
R20 750
C11 .022
C10 .022
R29 1.21K
R25 1.21K
LM311
R32 470
R30 470
C14 1000PF
R39 14.7K
C23 330PF
R35 4.7K
Q5 BOTTOM VIEW
R23 500
Q5 PN4393
R36 4.7K
C20 470PF
R40 470
C25 1000PF
J5
+12V
+5V
S/C
S/D
READ DATA
WRITE PROTECT
SPARE
R92 (OPTIONAL)
J1
WRITE GATE
SIDE SELECT
W DATA
C39 82PF
R50 4.7K
R90 4.7K
R7 220
CR2
CR1
LS139
DS (3D6)
R22 56K
C13 .022
R5 4.7K
PU2 (3B6)
R21 110K
C8 .022
J4
WRITE PROTECT
RP1 200
R46 100K
C32 1000PF
R45 47K
R51 4.7K
R6 4.7K
(3D5)
(3C4)
(3B6) PU1
3. COILS ARE IN MICROHENRIES
2. CAPACITANCE VALUES ARE IN MICROFARADS
1. RESISTANCE VALUES ARE IN OHMS
NOTES: UNLESS OTHERWISE SPECIFIED
4. COMPONENTS WITHOUT VALUES ARE NOT USED
ETCHED JUMPERS
JUMPER INSTALLED
JUMPER OPEN
APPLICATION
DO NOT SCALE DRAWING
PARTS LIST
MPI
48 TPI LOGIC
D
4-04002-801
REV AM6
SCALE NONE
SHEET 2 OF 3
4-04002-801

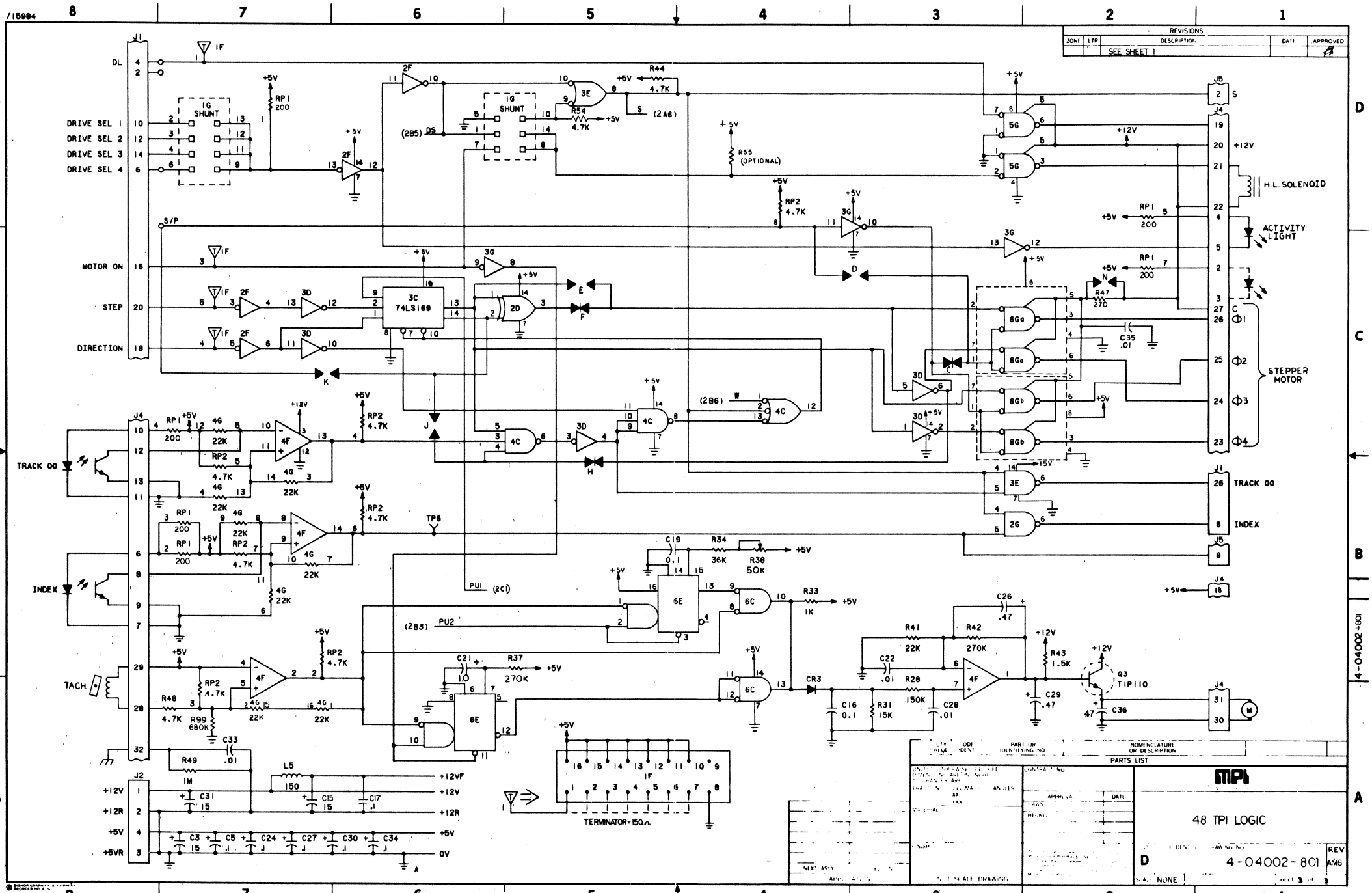
REVISIONS
ZONE | LTR | DESCRIPTION | DATE | APPROVED
SEE SHEET 1
DRIVE SEL 1
DRIVE SEL 2
DRIVE SEL 3
DRIVE SEL 4
MOTOR ON
STEP
DIRECTION
S/P
TRACK 00
INDEX
TACH
PU1 (2C1)
PU2 (2B3)
(2B5) DS
(2B6)
(2A6) S
H.L. SOLENOID
ACTIVITY LIGHT
STEPPER MOTOR
TERMINATOR=150Ω
48 TPI LOGIC
4-04002-801
PARTS LIST
NOMENCLATURE OR DESCRIPTION
SIZE D
SCALE NONE