SCHEMATIC DIAGRAM MODEL RQ-413S

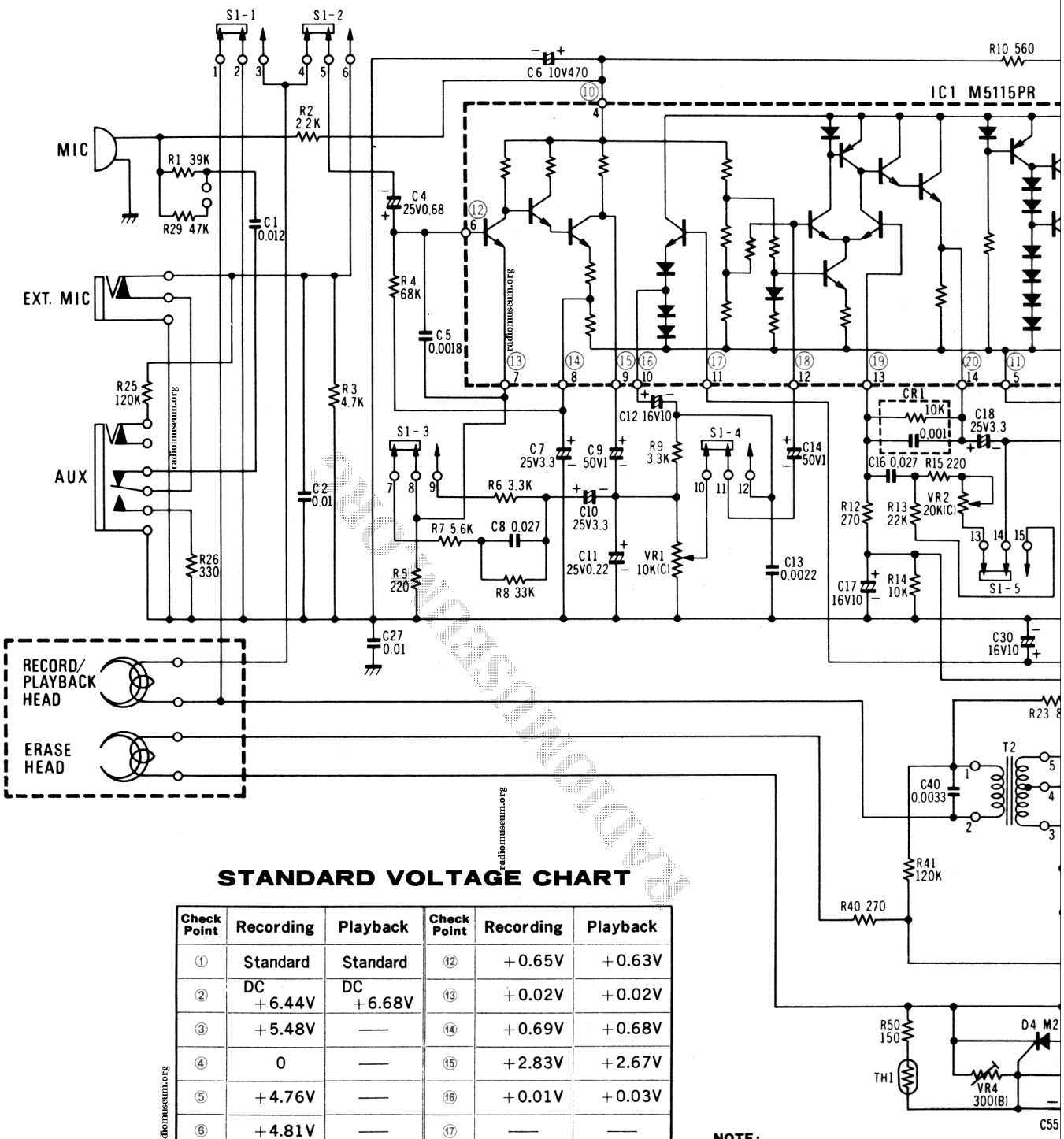

STANDARD VOLTAGE CHART

Check Point	Recording	Playback	Check Point	Recording	Playback
①	Standard	Standard	⑫	+0.65V	+0.63V
②	DC +6.44V	DC +6.68V	⑬	+0.02V	+0.02V
③	+5.48V	—	⑭	+0.69V	+0.68V
④	0	—	⑮	+2.83V	+2.67V
⑤	+4.76V	—	⑯	+0.01V	+0.03V
⑥	+4.81V	—	⑰	—	—
⑦	+6.43V	+6.67V	⑱	+1.35V	+1.31V
⑧	+1.95V	+1.95V	⑲	+1.46V	+1.41V
⑨	+5.49V	+5.70V	⑳	+2.91V	+2.79V
⑩	+4.59V	+4.77V	㉑	+1.95V	+1.94V
⑪	0V	0V	㉒	+6.67V	+6.43V

NOTE:

All measurements are under no signal conditions with volume at minimum position.

Use VTVM for voltage measurements.

NOTE:

1. S1-1~S1-8..... Record /playback select switch (s position).
2. S2 ..... Power ON/OFF switch (Leaf switc
3. S3 ..... AC/DC select switch (Coupled wi
4. S4 ..... Pause switch.
5. S5 ..... AC voltage select switch.
6. VR1 ..... Volume control.
7. VR2 ..... Tone control.
8. VR3 ..... Bias current adjusting VR.
9. VR4 ..... Battery check adjusting VR.
10. Resistors value are in ohms (Ω), 1/4 watt unless K=1,000Ω.
11. Capacitors value are in microfarad (μF) unless spe P=Pico-farads.
12. Encircled numbers (○) show the chekpoints for vo The values are marked in the standard voltage char

Radiomuseum.org: Panasonic, Matsushita, National (also tubes); Osaka RQ-413S

www.radiomuseum.org; upload by Heiko zur Mühlen; download by Ivan Badzakov Fri Oct 13 14:09:10 CEST 2017 [2893 x 2091, 156kb]