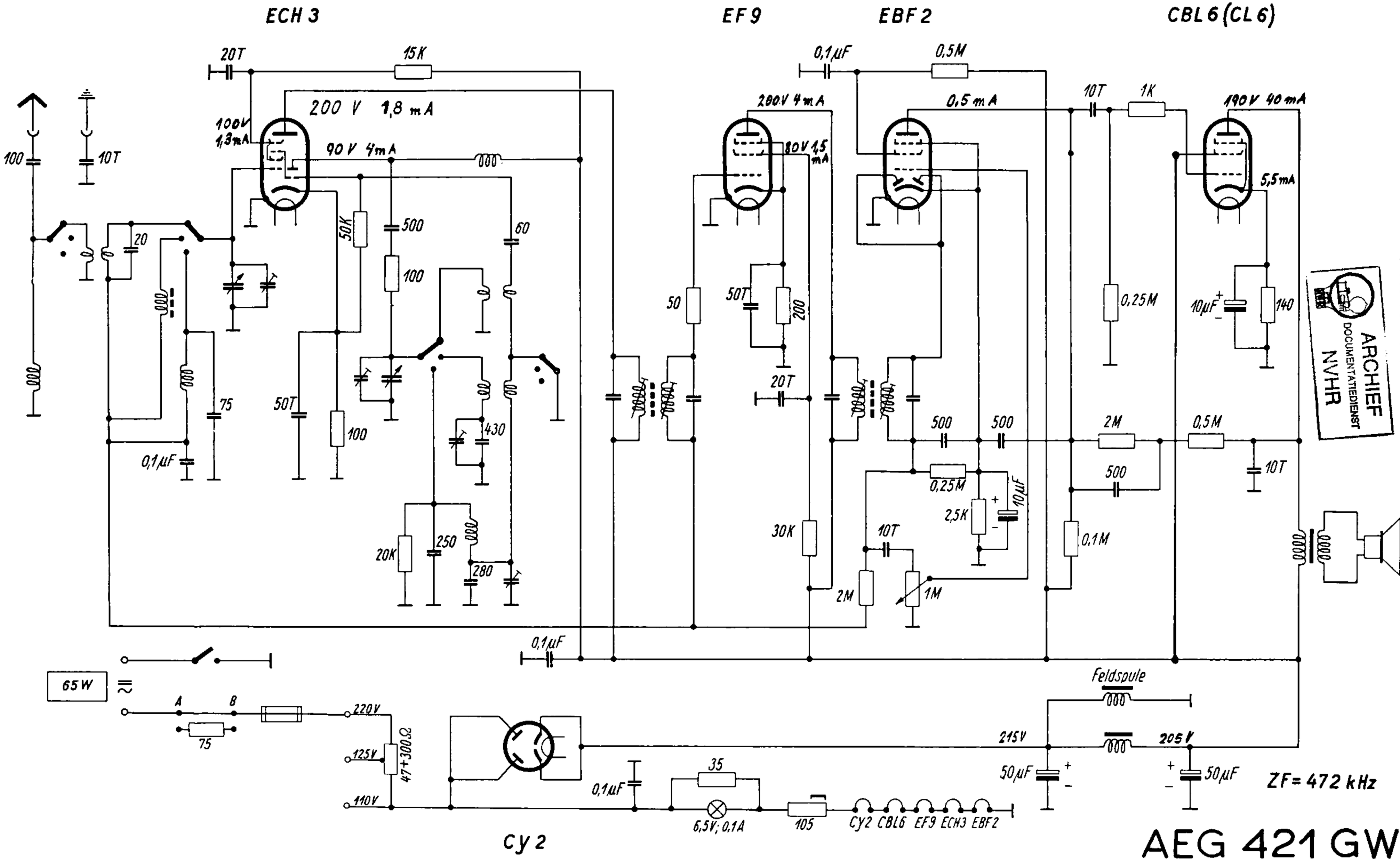

Ned. Ver. v. Historie v/d Radio

With the compliments of Eckhard Kull

AEG 421 GW