SERVICE MANUAL

BE-4A CHASSIS

MODEL	COMMANDER	DEST.	CHASSIS NO.	MODEL	COMMANDER	DEST.	CHASSIS NO.
KV-21M1A	RM-836	Italian	SCC-J05E-A	KV-21M1K	RM-836	OIRT	SCC-J03J-A
KV-21T1A	RM-836	Italian	SCC-J05D-A	KV-21T1K	RM-836	OIRT	SCC-J03G-A
KV-21M1B	RM-836	French	SCC-J06G-A	KV-21M1L	RM-836	Irish	SCC-J02D-A
KV-21T1B	RM-836	French	SCC-J06F-A	KV-21T1L	RM-836	Irish	SCC-J02C-A
KV-21M1D	RM-836	AEP	SCC-J08F-A	KV-21T1R	RM-836	OIRT	SCC-J03H-A
KV-21T1D	RM-836	AEP	SCC-J08E-A	KV-21M1U	RM-836	UK	SCC-J01E-A
KV-21M1E	RM-836	Spanish	SCC-J04F-A	KV-21T1U	RM-836	UK	SCC-J01D-A
KV-21T1E	RM-836	Spanish	SCC-J04E-A				

SUPPLEMENT - 1

SUBJECT : CHANGE OF PART NUMBER

File this supplement with the service manual

INTRODUCTION : Change of Part Number due to Beznet Assy

NOTE: This Supplement applies to the following models:-
KV-21M1K, KV-21T1K, KV-21T1R

- **SECTION 5 DIAGRAMS**
  (A board, Page 31) .... See page 2
  (C board, Page 35) ..... See page 5

- **SECTION 6 EXPLODED VIEWS**
  6-1. CHASSIS (Page 38) ..... See page 6

- **SECTION 7 ELECTRICAL PARTS LIST** (Page 40) ..... See page 7

MICROFILM

TRINITRON® COLOR TV

SONY®

– A Board –

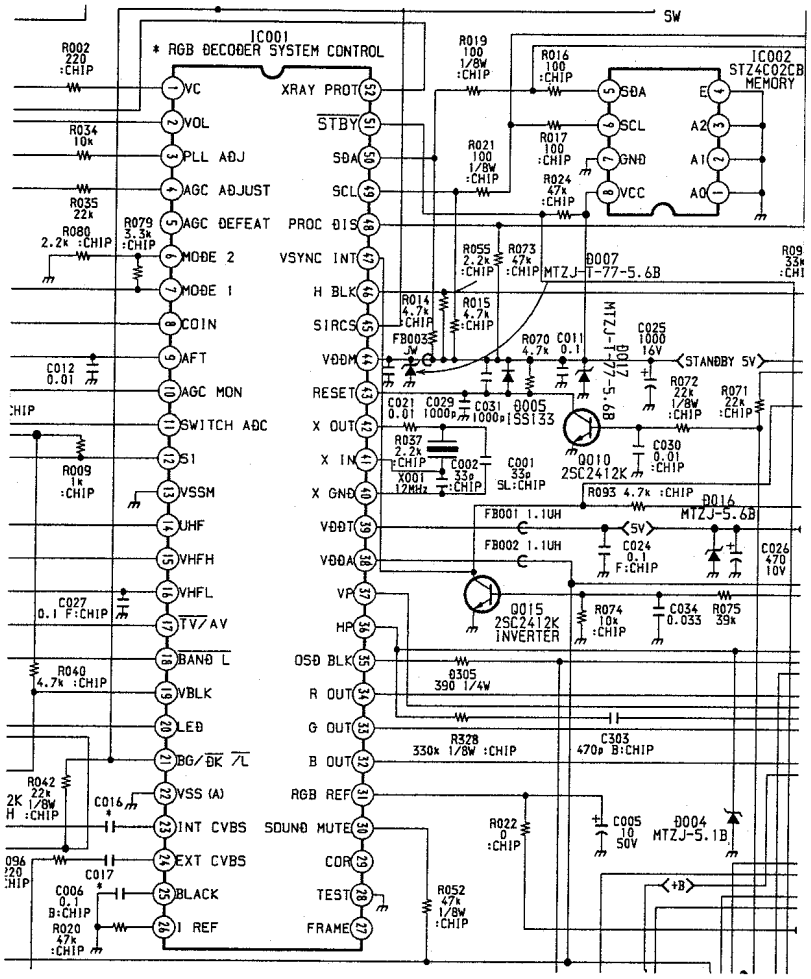
IC001
* RGB DECODER SYSTEM CONTROL
IC002
ST24C02CB
MEMORY
SW
VC
VOL
PLL ADJ
AGC ADJUST
AGC DEFEAT
MODE 2
MODE 1
COIN
AFT
AGC MON
SWITCH ADC
S1
VSSM
UHF
VHFH
VHFL
TV/AV
BAND L
VBLK
LED
BG/DK
VSS (A)
INT CVBS
EXT CVBS
BLACK
I REF
XRAY PROT
STBY
SDA
SCL
PROC DIS
VSYNC INT
H BLK
SIRCS
VDDM
RESET
X OUT
X IN
X GND
VDDT
VDDA
VP
HP
OSD BLK
R OUT
G OUT
B OUT
RGB REF
SOUND MUTE
COR
TEST
FRAME
STANDBY 5V
MTZJ-T-77-5.6B
MTZJ-T-77-5.6B
MTZJ-5.6B
MTZJ-5.1B
2SC2412K
INVERTER
2SC2412K
SS133
+B

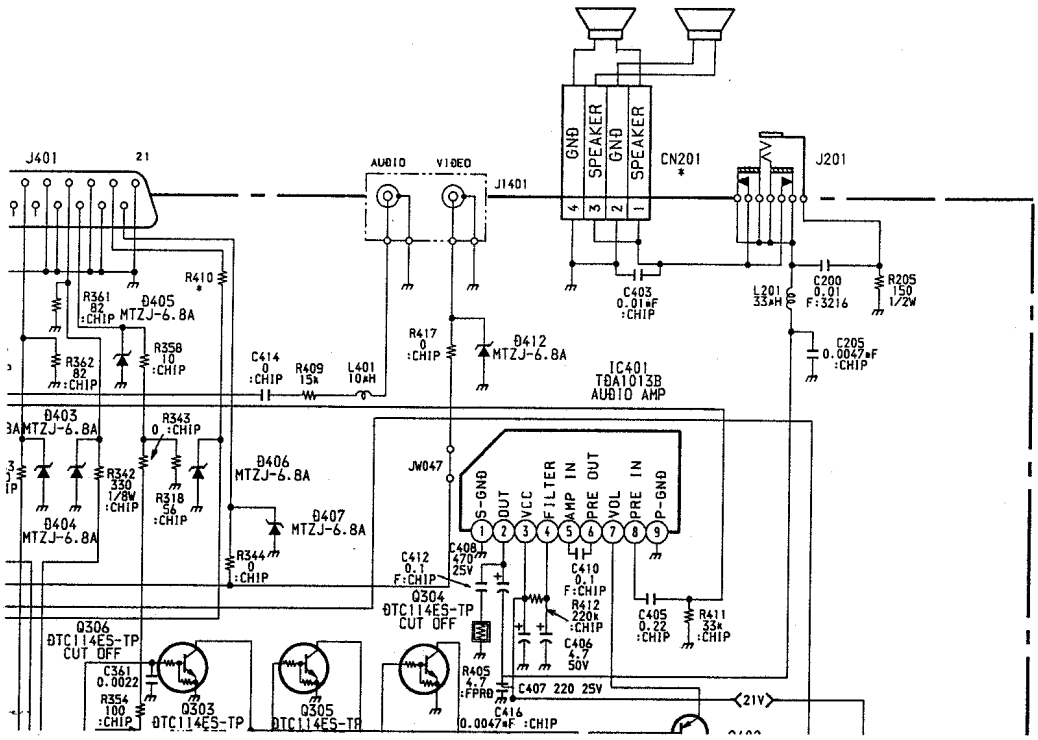
J401
AUDIO
VIDEO
J1401
GND
SPEAKER
GND
SPEAKER
CN201
J201
MTZJ-6.8A
MTZJ-6.8A
MTZJ-6.8A
MTZJ-6.8A
MTZJ-6.8A
MTZJ-6.8A
IC401
TDA1013B
AUDIO AMP
S-GND
OUT
VCC
FILTER
AMP IN
PRE OUT
VOL
PRE IN
P-GND
DTC114ES-TP
CUT OFF
DTC114ES-TP
CUT OFF
DTC114ES-TP
DTC114ES-TP
21V

C [R,G,B OUT]

– C Board –

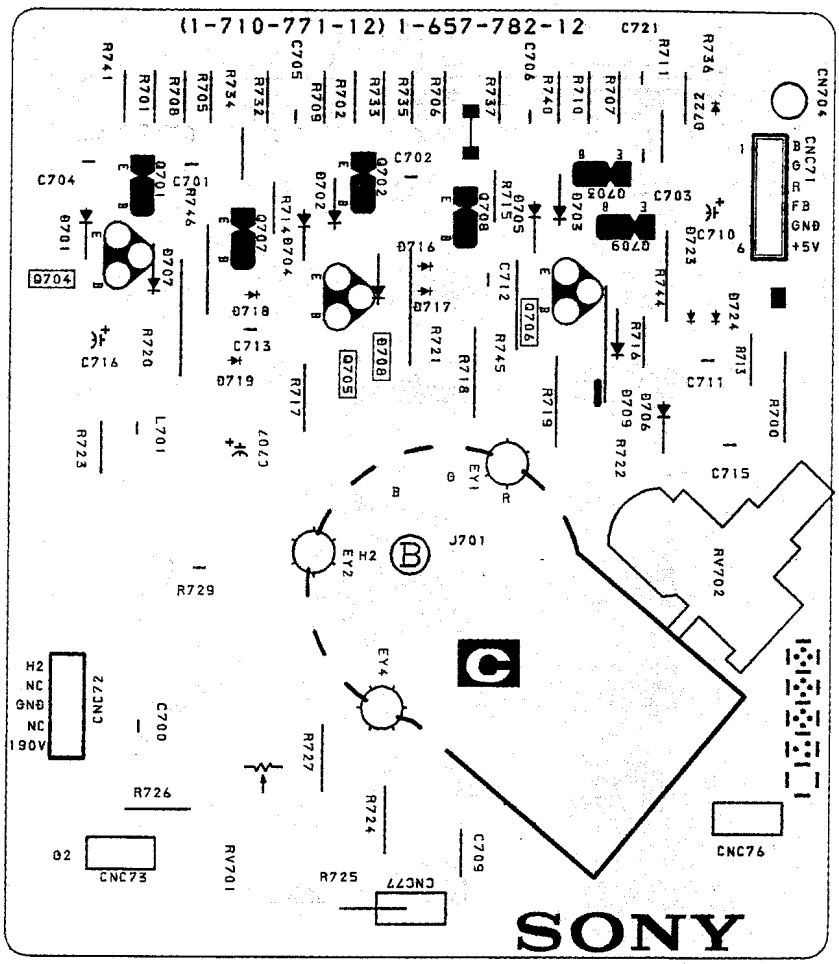

– C Board –

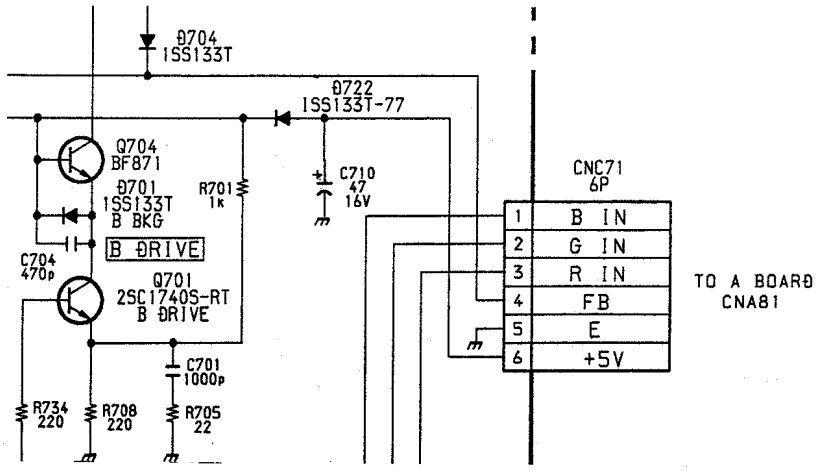

Item \ Model name	KV-21M1A KV-21T1A	KV-21M1B KV-21T1B	KV-21M1D KV-21T1D	KV-21M1E KV-21T1E	KV-21M1K KV-21T1K KV-21T1R	KV-21M1L KV-21T1L KV-21M1U KV-21T1U
PIP	OFF	OFF	OFF	OFF	OFF	OFF
MPIP	OFF	OFF	OFF	OFF	OFF	OFF
Scart 1	ON	ON	ON	ON	ON	ON
Scart 2	OFF	OFF	OFF	OFF	OFF	OFF
Front in (3)	ON	ON	ON	ON	ON	ON
Scart 4	OFF	OFF	OFF	OFF	OFF	OFF
Projector	OFF	OFF	OFF	OFF	OFF	OFF
AKB in 16:9 mode	OFF	OFF	OFF	OFF	OFF	OFF
Norm B/G/H	ON	ON	ON	ON	ON	OFF
Norm I	OFF	OFF	OFF	OFF	OFF	ON
Norm D/K	OFF	OFF	OFF	OFF	ON	OFF
Norm L	OFF	ON	OFF	OFF	OFF	OFF
Language Preset	Italian	French	German	Spanish	OIRT	English

WARNING (KV-21M1L/21T1L/21M1U/21T1U only)

The flexible mains lead is supplied connected to a **B.S. 1363** fused plug having a fuse of **5 AMP** capacity. Should the fuse need to be replaced, use a **5 AMP FUSE** approved by **ASTA** to **BS 1362**, ie one that carries the ASTA mark.
IF THE PLUG SUPPLIED WITH THIS APPLIANCE IS NOT SUITABLE FOR YOUR SOCKET OUTLETS IN YOUR HOME. IT SHOULD BE CUT OFF AND AN APPROPRIATE PLUG FITTED. THE PLUG SEVERED FROM THE MAINS LEAD MUST BE DESTROYED AS A PLUG WITH BARED WIRES IS DANGEROUS IF ENGAGED IN A LIVE SOCKET OUTLET.
When an alternative type of plug is used it should be fitted with a **5 AMP FUSE**, otherwise the circuit should be protected by a **5 AMP FUSE** at the distribution board.

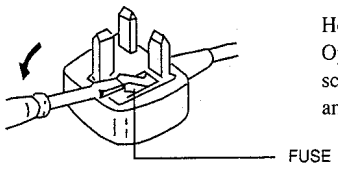

How to replace the fuse.
Open the fuse compartment with the screwdriver blade and replace the fuse.

SECTION 2
DISASSEMBLY

2-1. REAR COVER REMOVAL

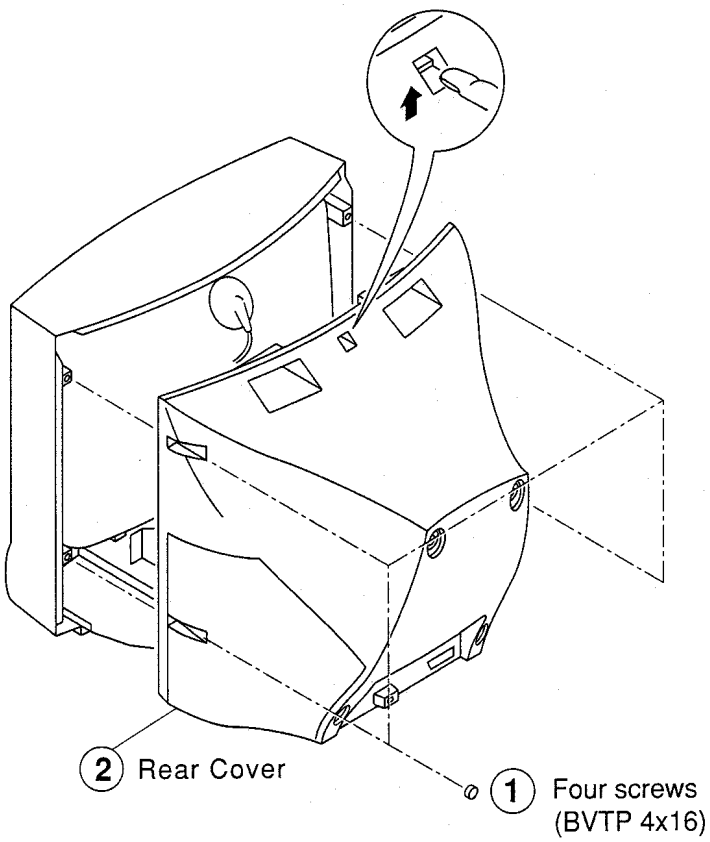

2-2. SERVICE POSITION

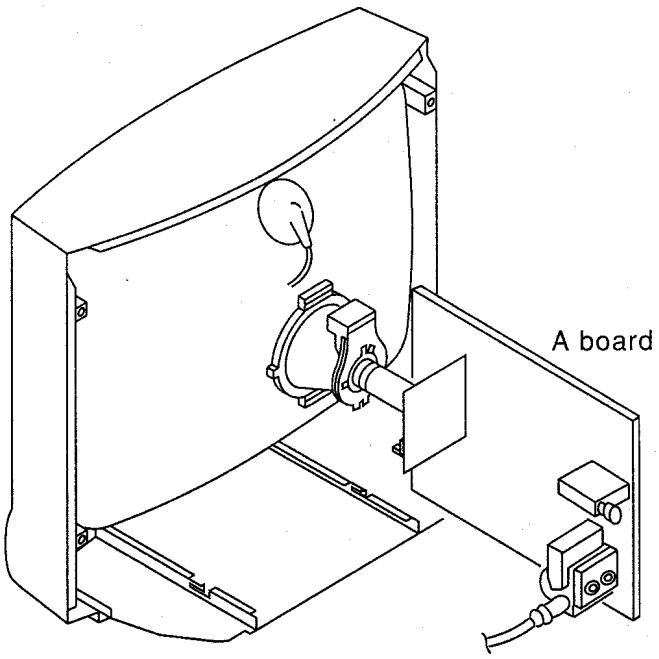

5-1. BLOCK DIAGRAM

SECTION 5
DIAGRAMS

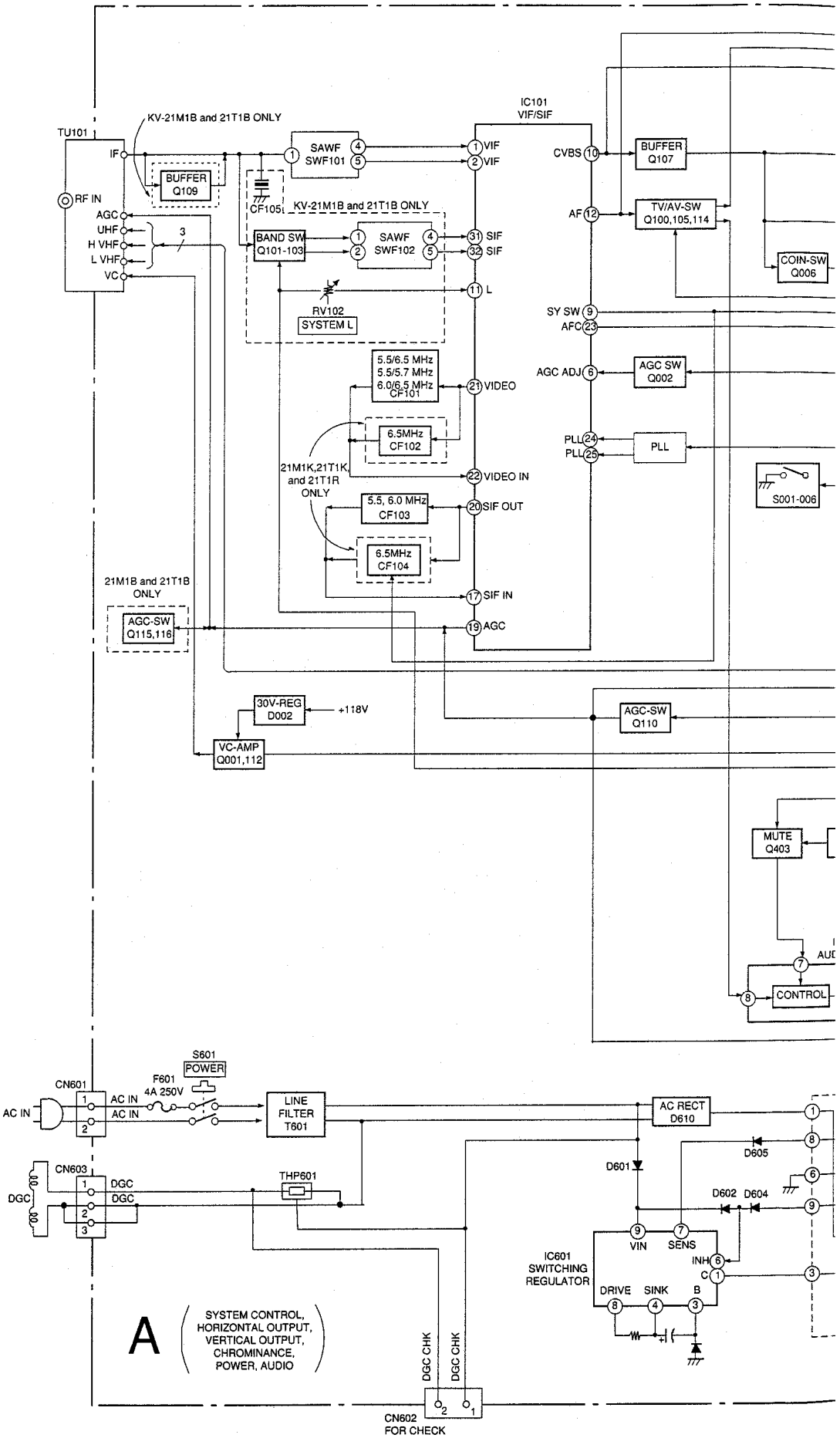

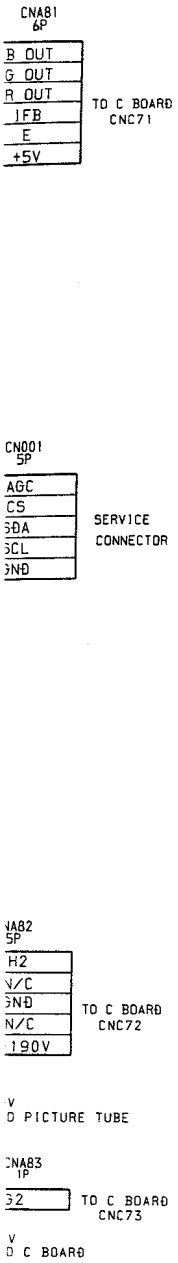

A BOARD IC301 MC44002P/MC44007P

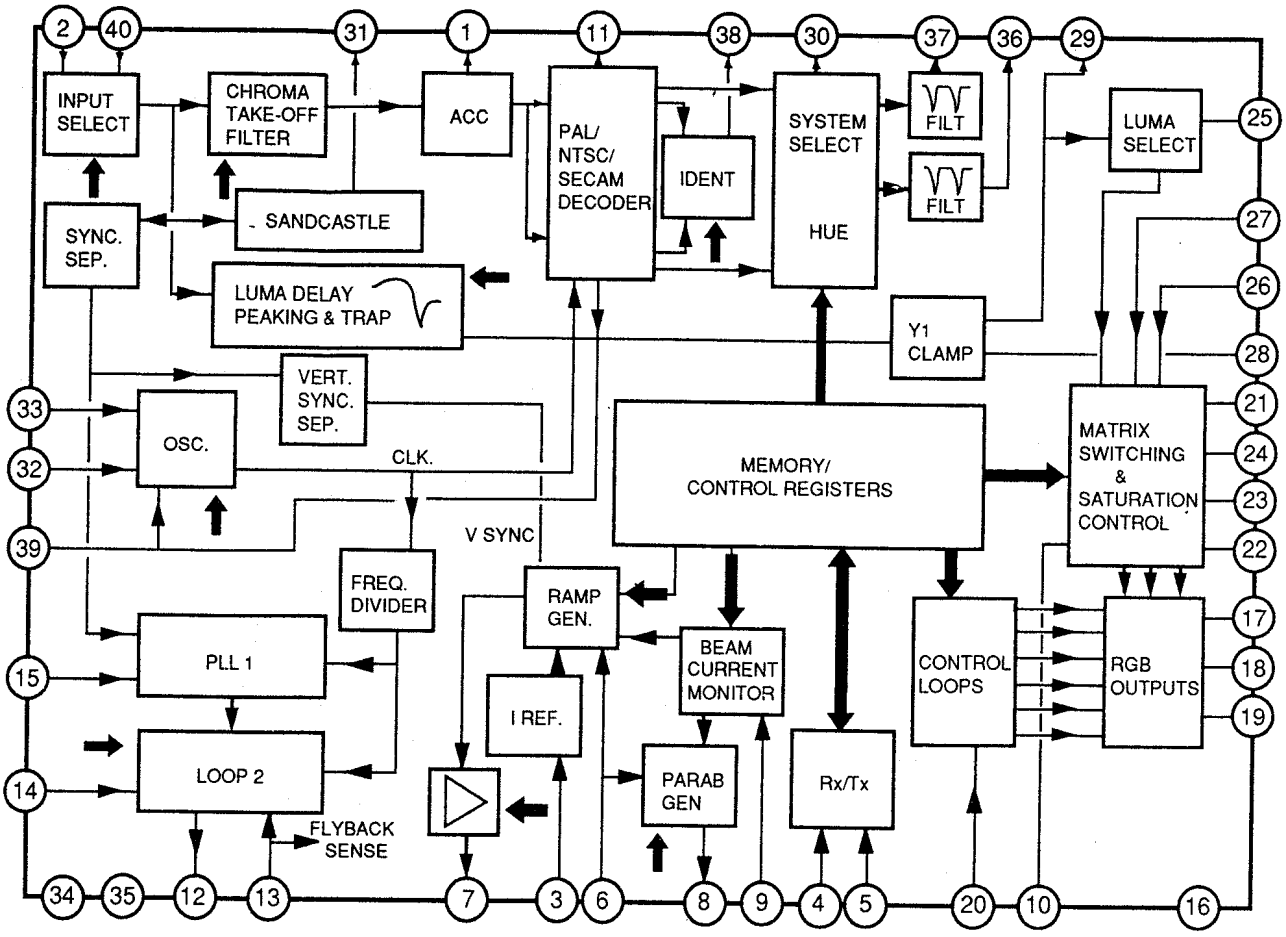

A BOARD IC601 STRS5706

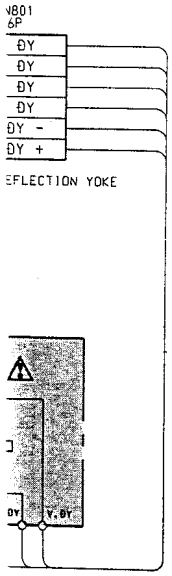

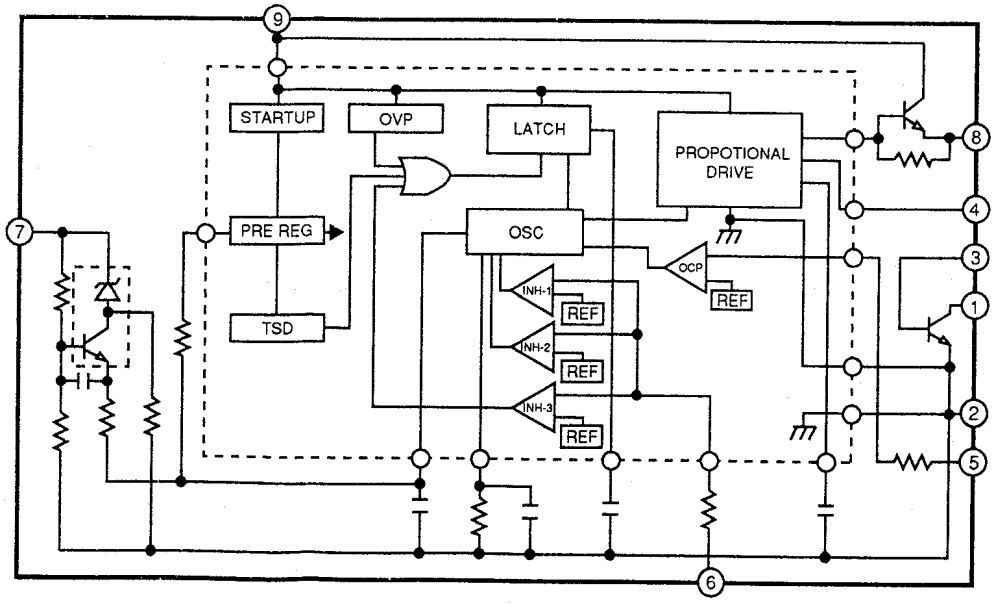

C [R.G.B OUT]

— C BOARD —

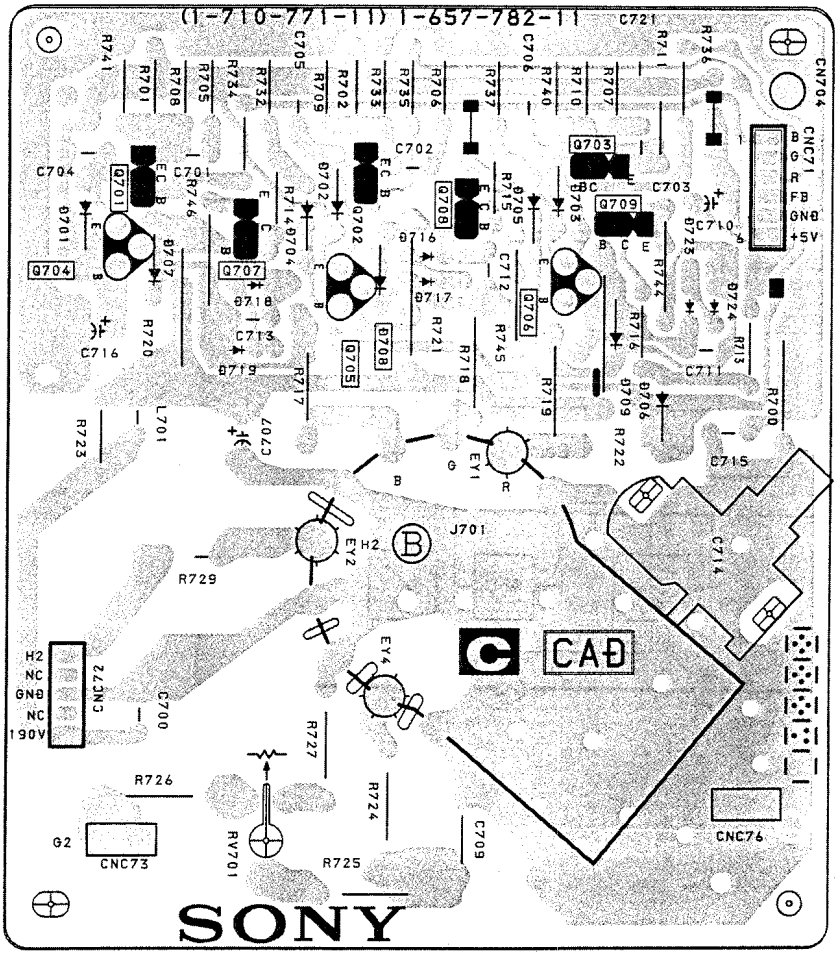

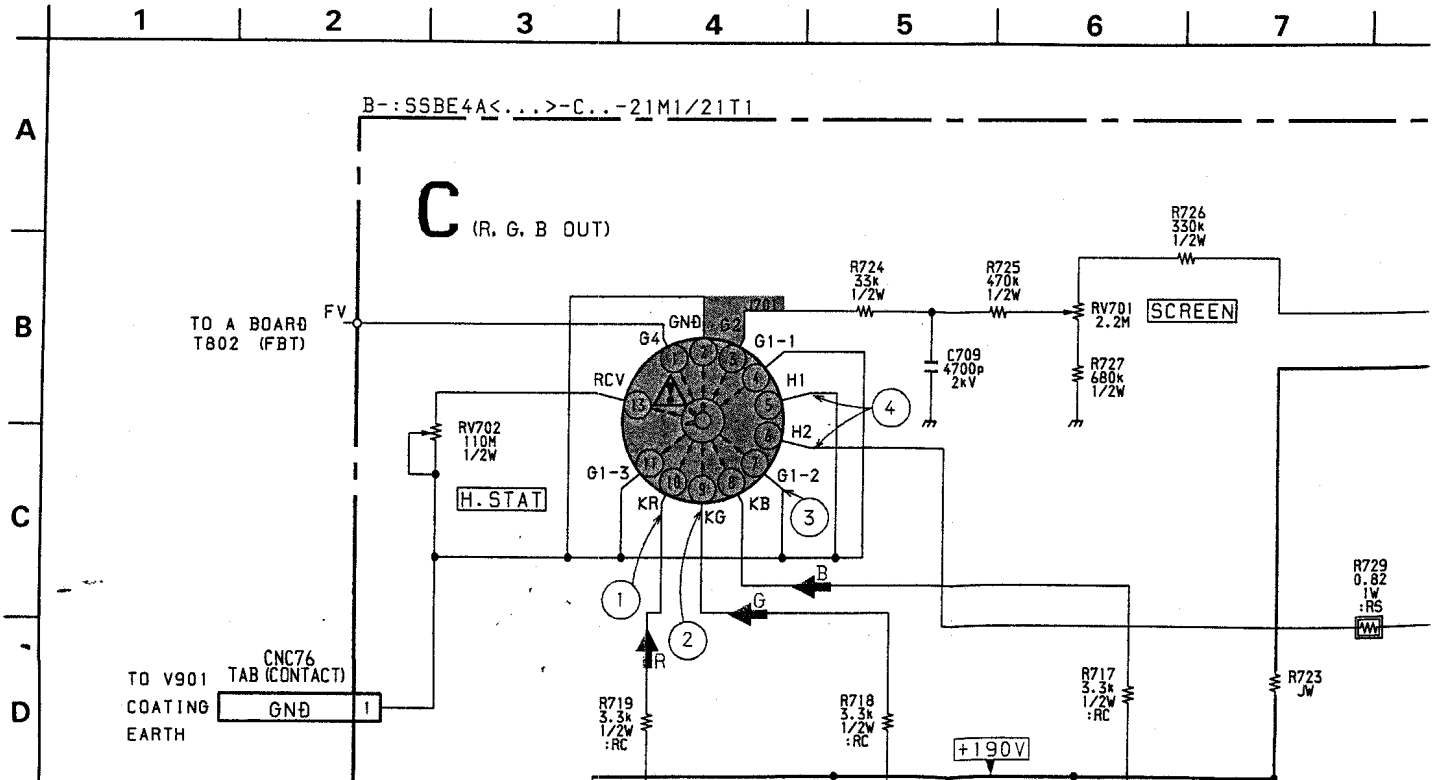

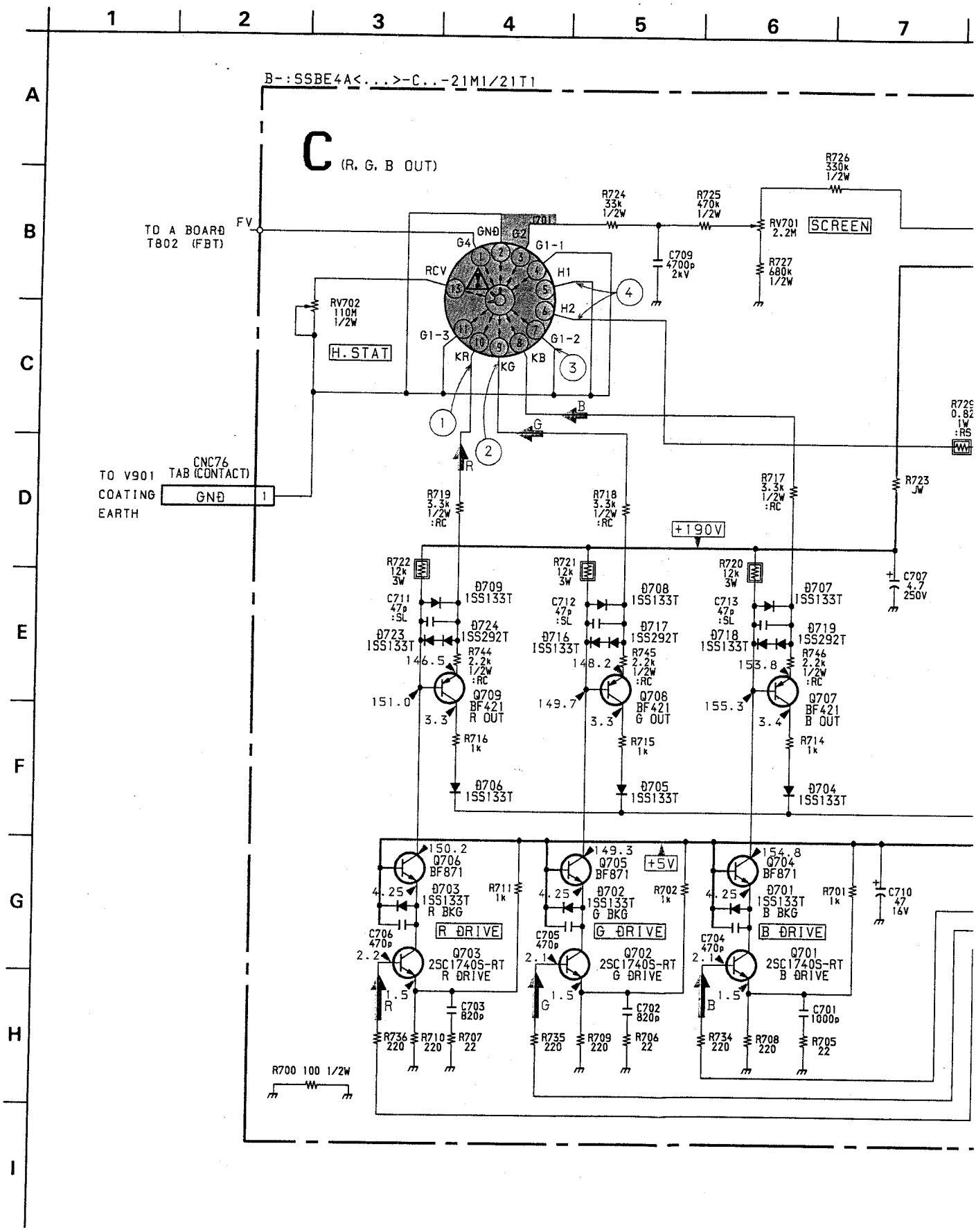
SONY
B-:SSBE4A<...>-C..-21M1/21T1
C (R. G. B OUT)
TO A BOARD T802 (FBT)
FV
GND
G2
G4
G1-1
H1
H2
G1-2
KB
KG
KR
G1-3
RCV
RV702 110M 1/2W
H.STAT
R724 33k 1/2W
R725 470k 1/2W
R726 330k 1/2W
RV701 2.2M
SCREEN
C709 4700p 2kV
R727 680k 1/2W
TO V901 COATING EARTH
CNC76 TAB (CONTACT)
GND
R719 3.3k 1/2W :RC
R718 3.3k 1/2W :RC
R717 3.3k 1/2W :RC
R723 JW
+190V
R722 12k 3W
R721 12k 3W
R720 12k 3W
C707 4.7 250V
D709 1SS133T
D708 1SS133T
D707 1SS133T
C711 47p :SL
C712 47p :SL
C713 47p :SL
D724 1SS292T
D717 1SS292T
D719 1SS292T
D723 1SS133T
D716 1SS133T
D718 1SS133T
R744 2.2k 1/2W :RC
R745 2.2k 1/2W :RC
R746 2.2k 1/2W :RC
146.5
148.2
153.8
151.0
149.7
155.3
3.3
3.4
Q709 BF421 R OUT
Q708 BF421 G OUT
Q707 BF421 B OUT
R716 1k
R715 1k
R714 1k
D706 1SS133T
D705 1SS133T
D704 1SS133T
150.2
149.3
154.8
Q706 BF871
Q705 BF871
Q704 BF871
+5V
4.25
D703 1SS133T R BKG
D702 1SS133T G BKG
D701 1SS133T B BKG
R711 1k
R702 1k
R701 1k
C710 47 16V
R DRIVE
G DRIVE
B DRIVE
C706 470p
C705 470p
C704 470p
2.2
2.1
Q703 2SC1740S-RT R DRIVE
Q702 2SC1740S-RT G DRIVE
Q701 2SC1740S-RT B DRIVE
1.5
C703 820p
C702 820p
C701 1000p
R736 220
R710 220
R707 22
R735 220
R709 220
R706 22
R734 220
R708 220
R705 22
R700 100 1/2W

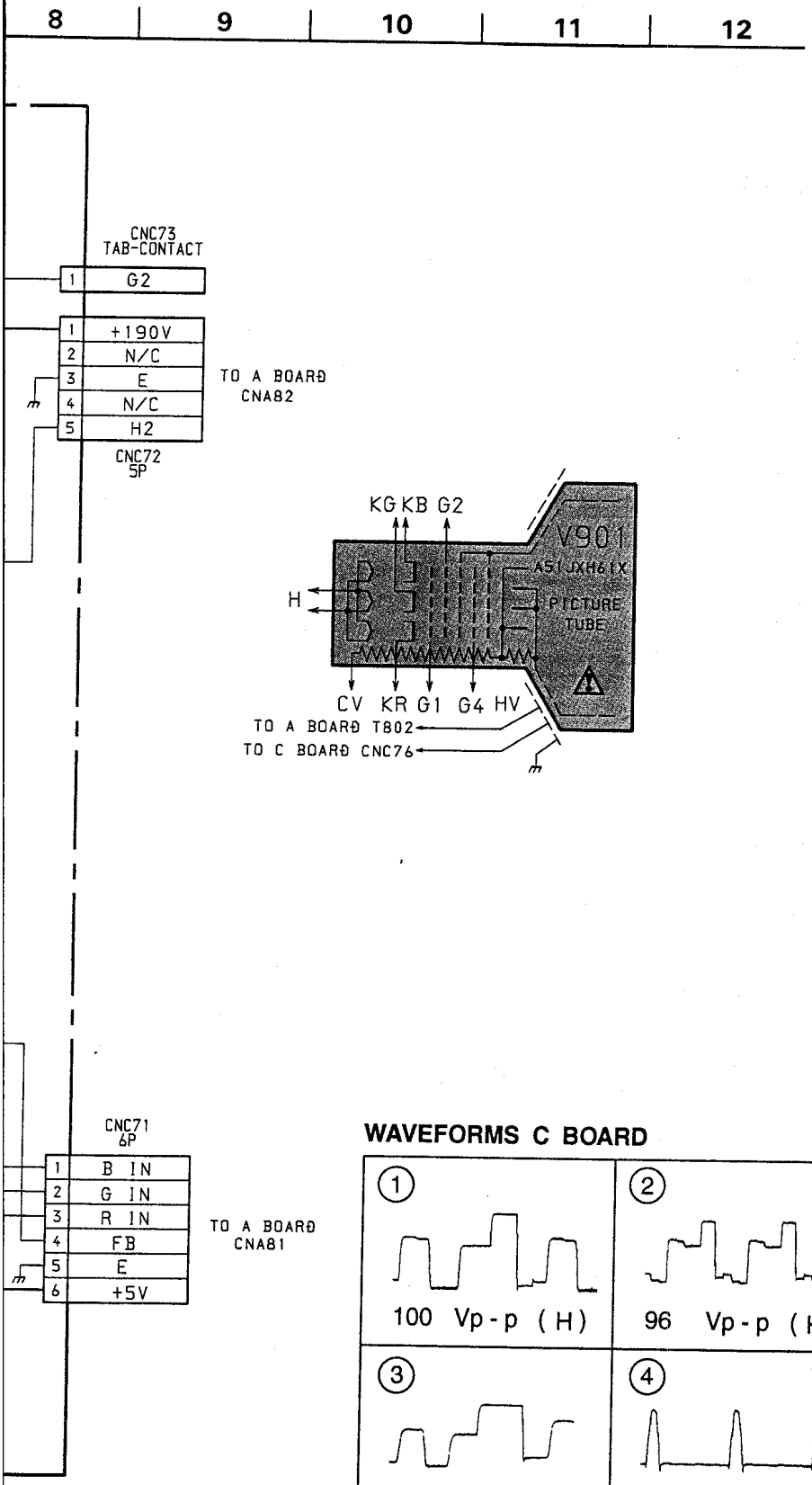

WAVEFORMS C BOARD

① 100 Vp-p (H)	② 96 Vp-p (H)
③ 85 Vp-p (H)	④ 23 Vp-p (H)

5-4. SEMICONDUCTORS

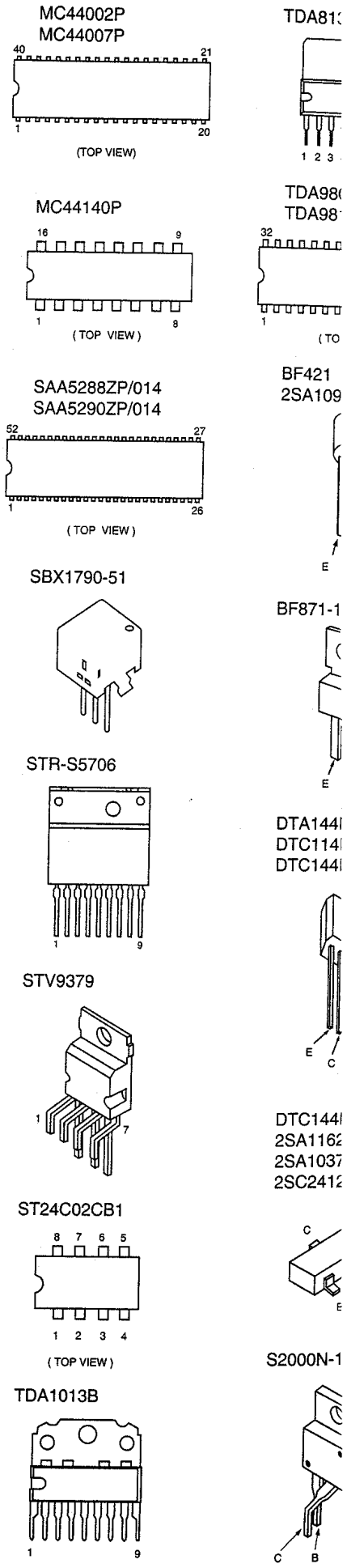

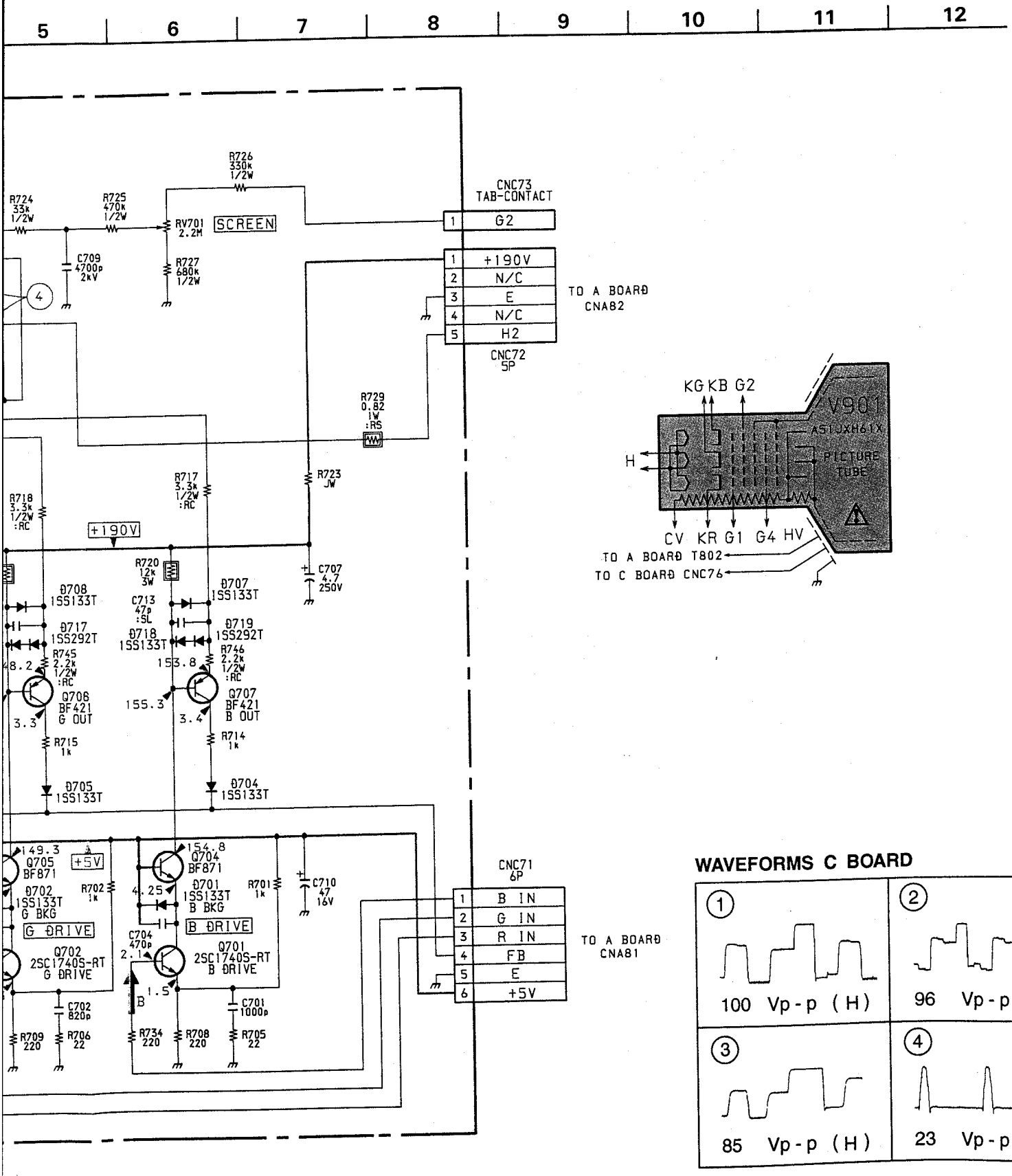

WAVEFORMS C BOARD

① 100 Vp-p (H)	② 96 Vp-p (H)
③ 85 Vp-p (H)	④ 23 Vp-p (H)

5-4. SEMICONDUCTORS

MC44002P
MC44007P

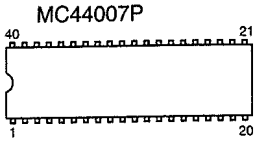

(TOP VIEW)

MC44140P

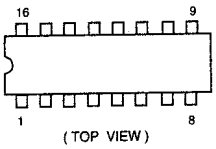

(TOP VIEW)

SAA5288ZP/014
SAA5290ZP/014

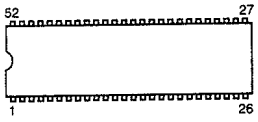

(TOP VIEW)

SBX1790-51

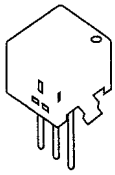

STR-S5706

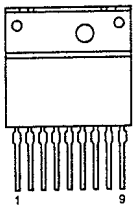

STV9379

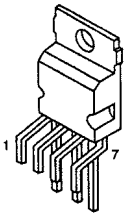

ST24C02CB1

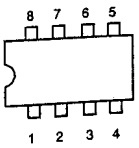

(TOP VIEW)

TDA1013B

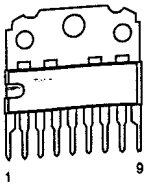

TDA8139

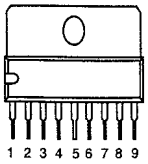

TDA9806
TDA9812

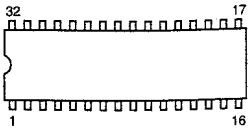

(TOP VIEW)

BF421
2SA1091-O

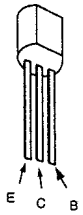

BF871-127

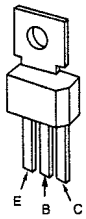

DTA144ES
DTC114ES
DTC144ES

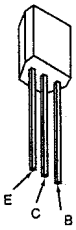

DTC144EK
2SA1162-G
2SA1037K
2SC2412K-QR

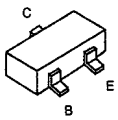

S2000N-16E305A

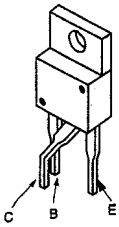

2SA933AS
2SA933S
2SA1175-HFE
2SC2410SN

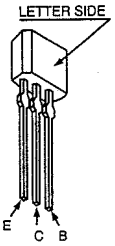

2SC1740S
2SC2785-HFE

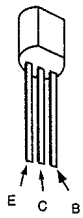

2SC2688-L

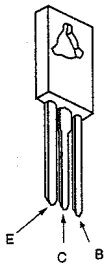

2SC3209LK
2SD774-34

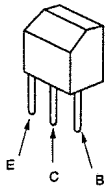

2SC3779C, D-AA

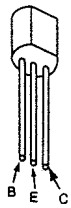

2SD1408-Y
2SD1761-E
2SD2394-EF

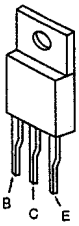

HZT33-02RE
UPC574J

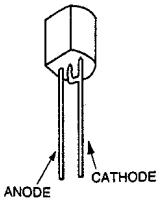

BYD33G	EU-1Z
EG-1Z-V1	RGP02-17EL-6433
EGP20G	RGP02-17PKG23
EL1Z	RGP10GPKG23
EM1-V1	RGP15J-6040FG23
ERC06-15S	RU3AM
ERD28-06S	1SS168
ERD28-08S	1SS238

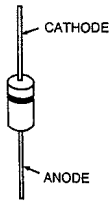

ERA81-004	RD5.1ESB2
ERA83-006	RD5.6ESB2
MTZJ-5.1B	RD6.8ESB2
MTZJ-5.6B	1SS133T-77
MTZJ-6.8A	

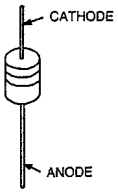

GBU4JL-6088

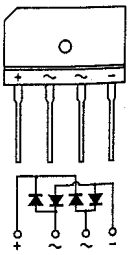

1SV214

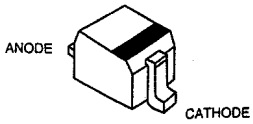

LR5360-HL

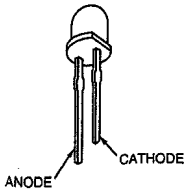

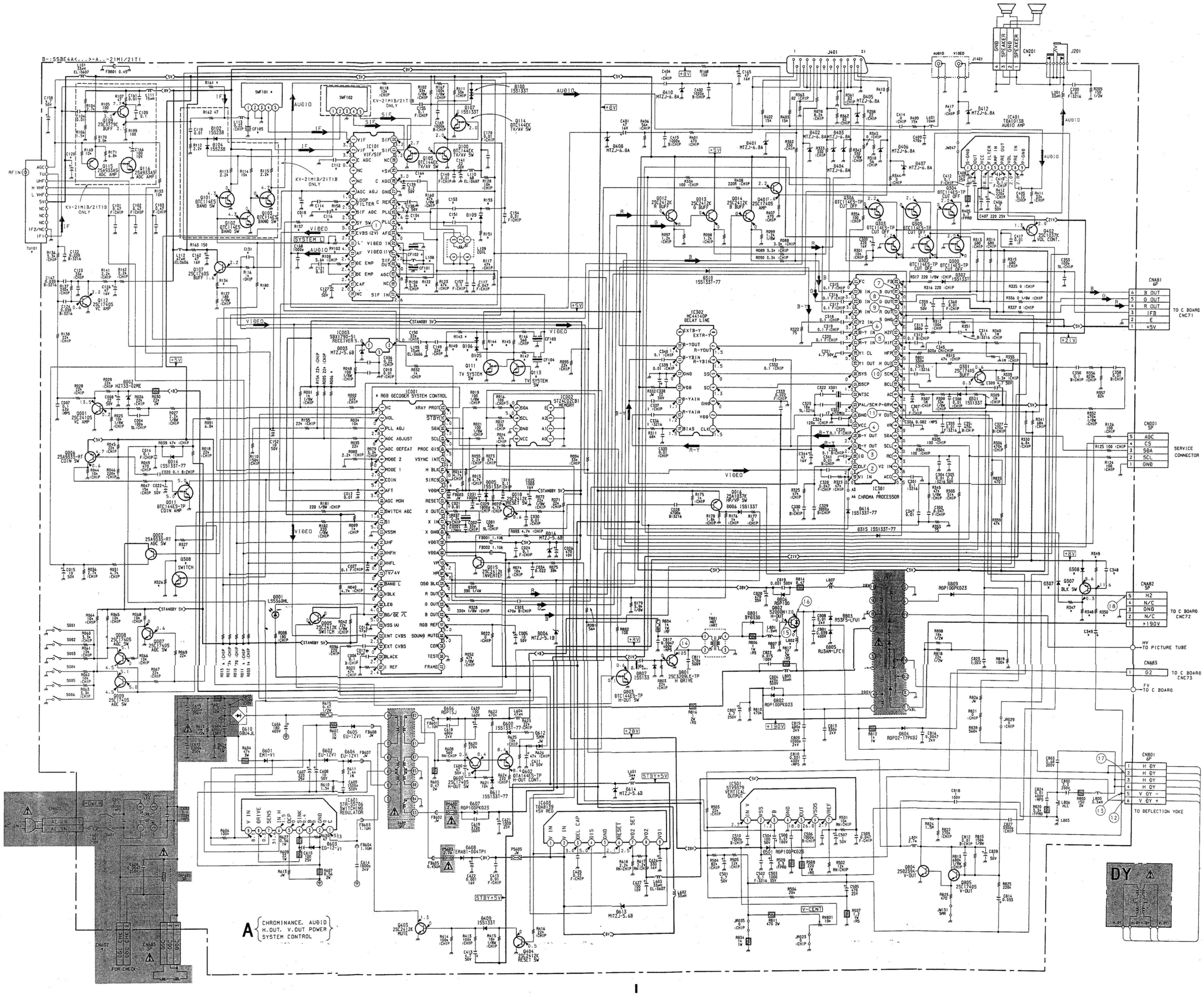
B-:S5BE4A<...>-A..-21M1/21T1
RF IN
TU101
IC101
VIF/SIF
IC001
RGB DECODER SYSTEM CONTROL
IC002
ST24C02CB1
MEMORY
IC003
SBX1790-51
RECEIVER
IC302
MC44140P
DELAY LINE
IC401
TBA1013B
AUDIO AMP
IC301
A3 CHROMA PROCESSOR
IC501
STV9379
VERTICAL OUTPUT
IC601
STR-55706
SWITCHING REGULATOR
IC603
TDA8139
+5V REG
J401
J201
CN201
SPEAKER
GND
CNA81
6P
TO C BOARD
CNC71
CN001
5P
SERVICE
CONNECTOR
CNA82
5P
TO C BOARD
CNC72
CNA83
TO C BOARD
CNC73
HV
TO PICTURE TUBE
FV
TO C BOARD
CNB01
6P
TO DEFLECTION YOKE
DY
POWER
FOR CHECK
A
CHROMINANCE, AUDIO
H.OUT, V.OUT POWER
SYSTEM CONTROL
STANDBY 5V
STBY+5V
+190V
+28V
V-CENT

A BOARD IC101 TDA9806/TDA9812

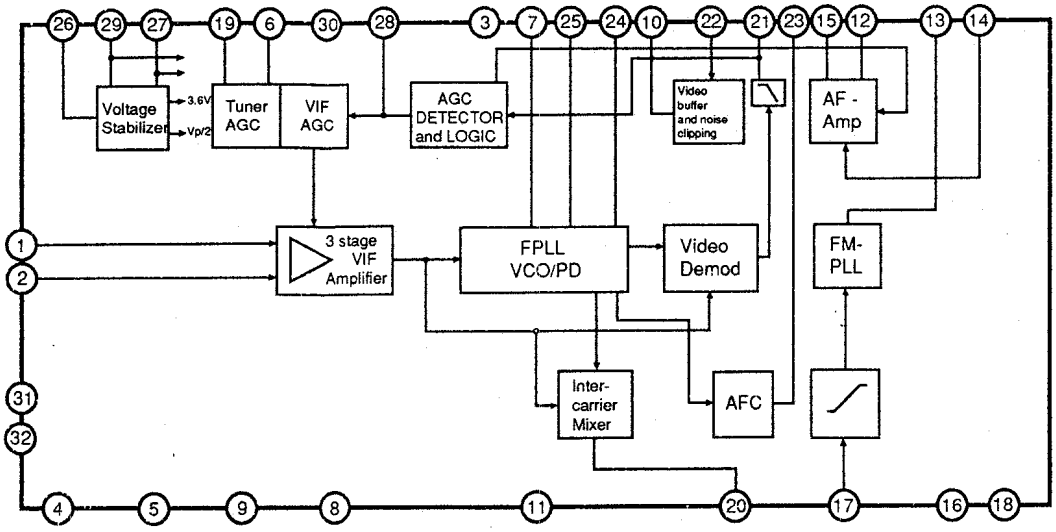

TO C BOARD CNC71

A BOARD IC301 MC44002P/MC44007P

SERVICE CONNECTOR

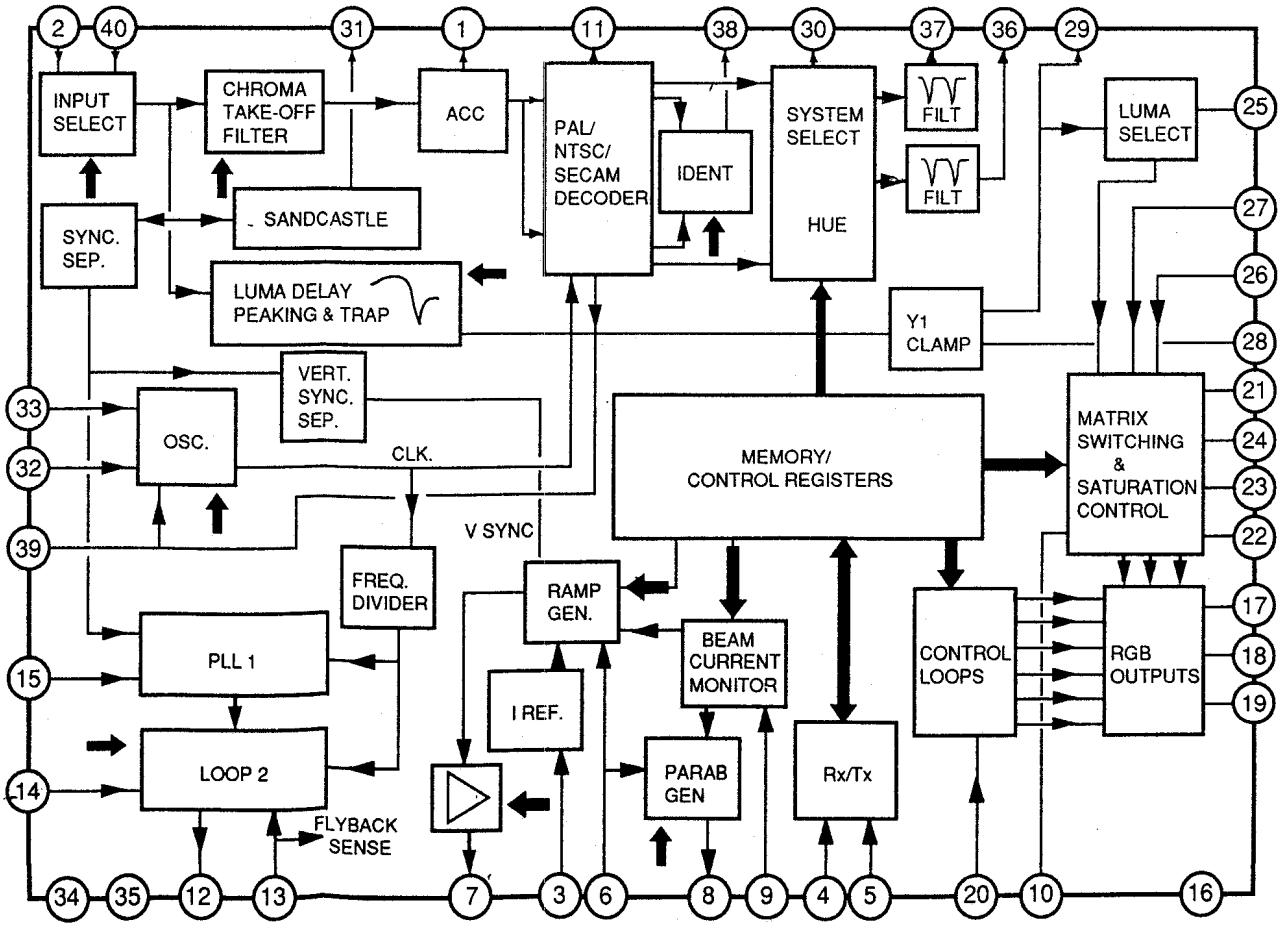

TO C BOARD CNC72

TUBE

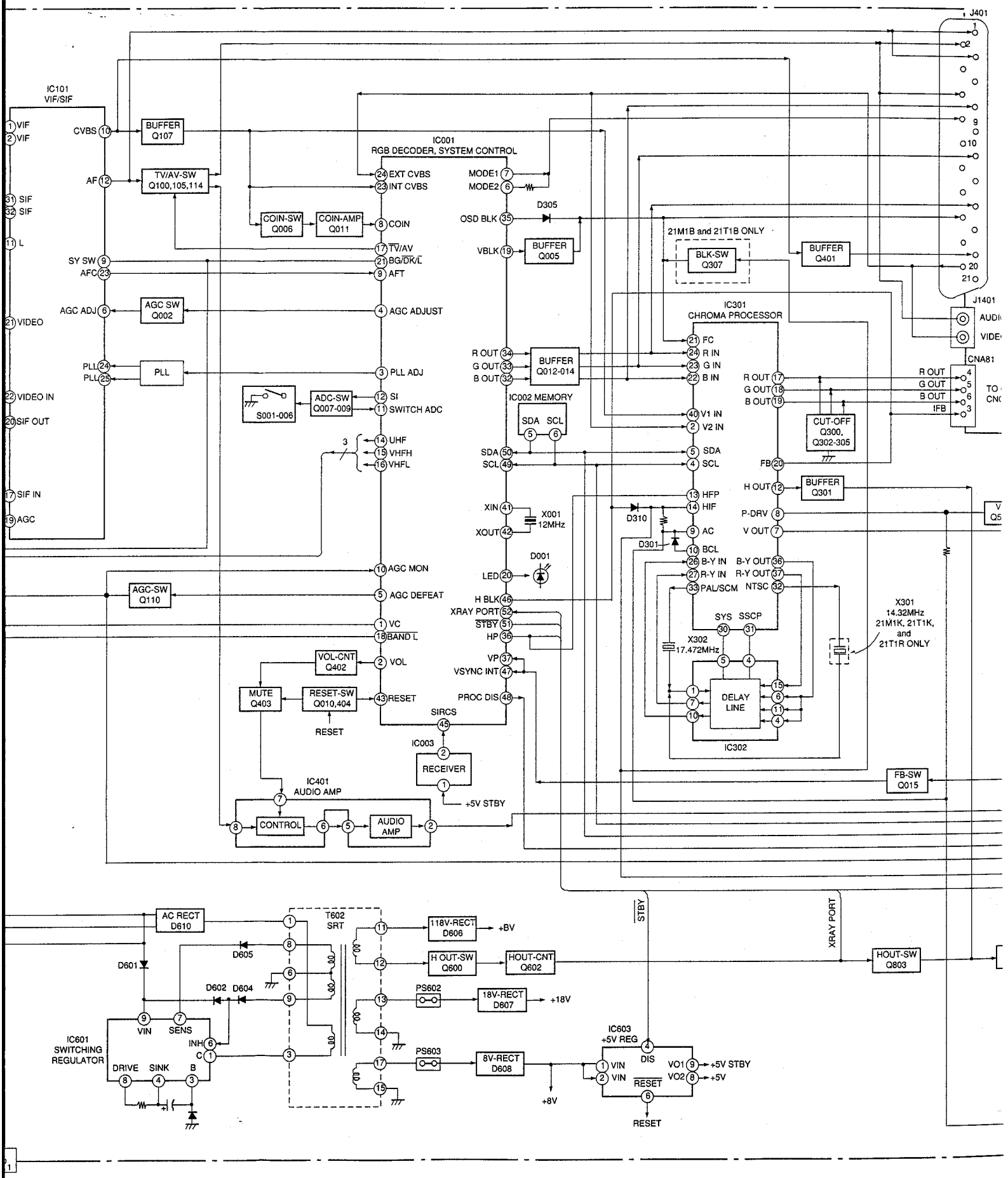
IC101
VIF/SIF
VIF
VIF
CVBS
AF
SIF
SIF
L
SY SW
AFC
AGC ADJ
VIDEO
PLL
PLL
VIDEO IN
SIF OUT
SIF IN
AGC
BUFFER Q107
TV/AV-SW Q100,105,114
AGC SW Q002
PLL
IC001
RGB DECODER, SYSTEM CONTROL
EXT CVBS
INT CVBS
COIN-SW Q006
COIN-AMP Q011
COIN
TV/AV
BG/DK/L
AFT
AGC ADJUST
PLL ADJ
S001-006
ADC-SW Q007-009
SI
SWITCH ADC
UHF
VHFH
VHFL
AGC MON
AGC-SW Q110
AGC DEFEAT
VC
BAND L
VOL-CNT Q402
VOL
MUTE Q403
RESET-SW Q010,404
RESET
MODE1
MODE2
OSD BLK
D305
VBLK
BUFFER Q005
R OUT
G OUT
B OUT
BUFFER Q012-014
IC002 MEMORY
SDA SCL
SDA
SCL
XIN
XOUT
X001 12MHz
LED
D001
H BLK
XRAY PORT
STBY
HP
VP
VSYNC INT
PROC DIS
SIRCS
IC003
RECEIVER
+5V STBY
IC401
AUDIO AMP
CONTROL
AUDIO AMP
21M1B and 21T1B ONLY
BLK-SW Q307
BUFFER Q401
J401
J1401
AUDI
VIDE
CNA81
TO CN
IC301
CHROMA PROCESSOR
FC
R IN
G IN
B IN
V1 IN
V2 IN
SDA
SCL
HFP
HIF
AC
BCL
B-Y IN
R-Y IN
PAL/SCM
R OUT
G OUT
B OUT
IFB
CUT-OFF Q300, Q302-305
FB
BUFFER Q301
H OUT
P-DRV
V OUT
D310
D301
B-Y OUT
R-Y OUT
NTSC
SYS
SSCP
X302 17.472MHz
DELAY LINE
IC302
X301 14.32MHz 21M1K, 21T1K, and 21T1R ONLY
FB-SW Q015
AC RECT D610
D601
D605
D602
D604
T602 SRT
118V-RECT D606
+BV
H OUT-SW Q600
HOUT-CNT Q602
PS602
18V-RECT D607
+18V
PS603
8V-RECT D608
+8V
IC601
SWITCHING REGULATOR
VIN
SENS
INH
C
DRIVE
SINK
B
IC603
+5V REG
DIS
VIN
VIN
RESET
VO1
VO2
+5V STBY
+5V
RESET
STBY
XRAY PORT
HOUT-SW Q803

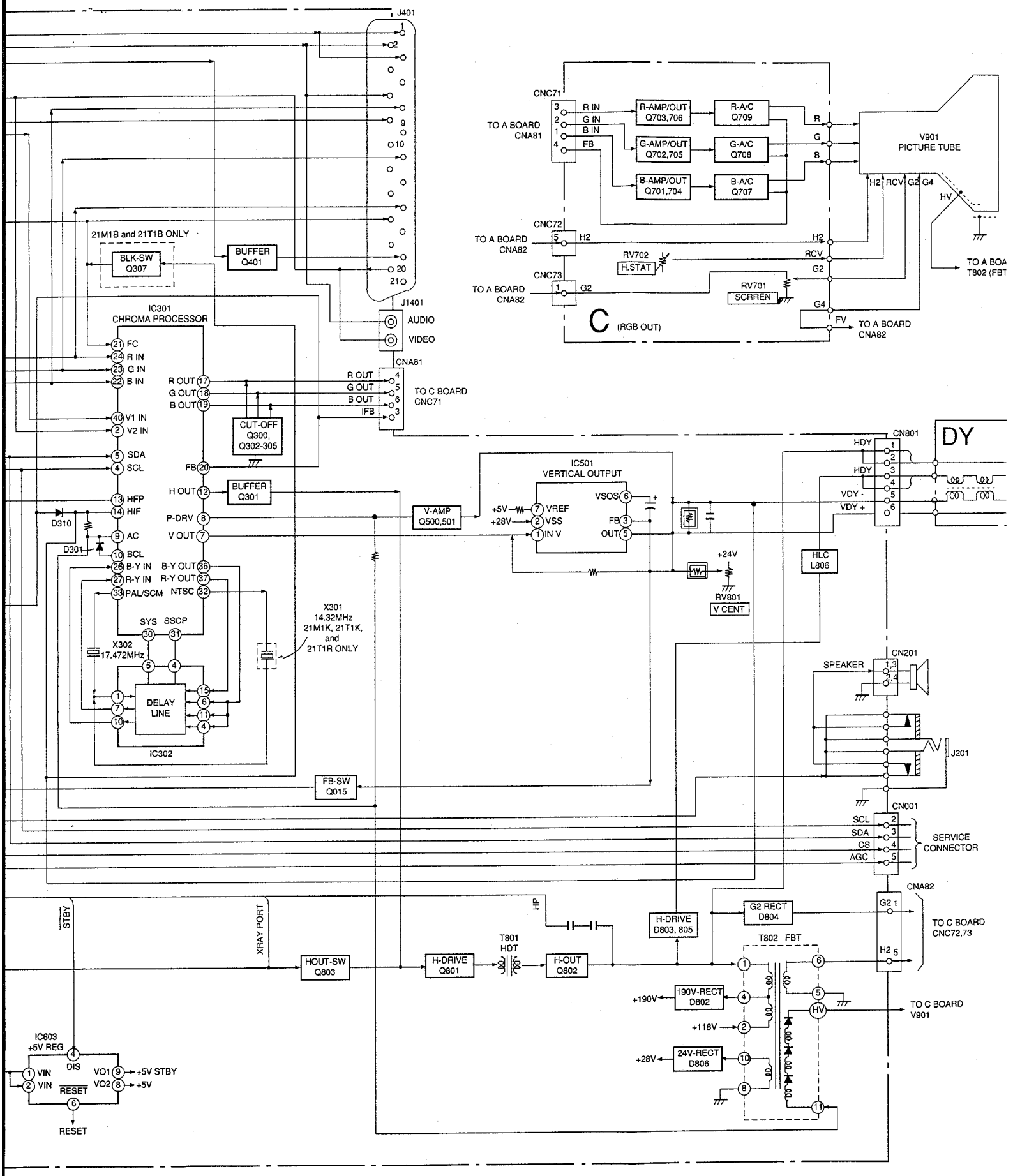
J401
CNC71
TO A BOARD CNA81
R IN
G IN
B IN
FB
R-AMP/OUT Q703,706
G-AMP/OUT Q702,705
B-AMP/OUT Q701,704
R-A/C Q709
G-A/C Q708
B-A/C Q707
V901 PICTURE TUBE
H2
RCV
G2
G4
HV
CNC72
TO A BOARD CNA82
RV702 H.STAT
RV701 SCRREN
CNC73
C (RGB OUT)
FV
TO A BOARD CNA82
TO A BOA T802 (FBT
21M1B and 21T1B ONLY
BLK-SW Q307
BUFFER Q401
J1401
AUDIO
VIDEO
CNA81
IC301 CHROMA PROCESSOR
FC
R IN
G IN
B IN
V1 IN
V2 IN
SDA
SCL
HFP
HIF
AC
BCL
B-Y IN
R-Y IN
PAL/SCM
R OUT
G OUT
B OUT
IFB
TO C BOARD CNC71
CUT-OFF Q300, Q302-305
FB
H OUT
P-DRV
V OUT
BUFFER Q301
D310
D301
B-Y OUT
R-Y OUT
NTSC
SYS
SSCP
X302 17.472MHz
DELAY LINE
IC302
X301 14.32MHz 21M1K, 21T1K, and 21T1R ONLY
FB-SW Q015
V-AMP Q500,501
IC501 VERTICAL OUTPUT
+5V
+28V
VREF
VSS
IN V
VSOS
FB
OUT
+24V
RV801 V CENT
HLC L806
CN801
HDY
VDY -
VDY +
DY
CN201
SPEAKER
J201
CN001
SCL
SDA
CS
AGC
SERVICE CONNECTOR
CNA82
G2
H2
TO C BOARD CNC72,73
STBY
XRAY PORT
HOUT-SW Q803
H-DRIVE Q801
T801 HDT
H-OUT Q802
HP
H-DRIVE D803, 805
G2 RECT D804
T802 FBT
190V-RECT D802
+190V
+118V
24V-RECT D806
+28V
HV
TO C BOARD V901
IC603 +5V REG
DIS
VIN
VO1
VO2
RESET
+5V STBY
+5V

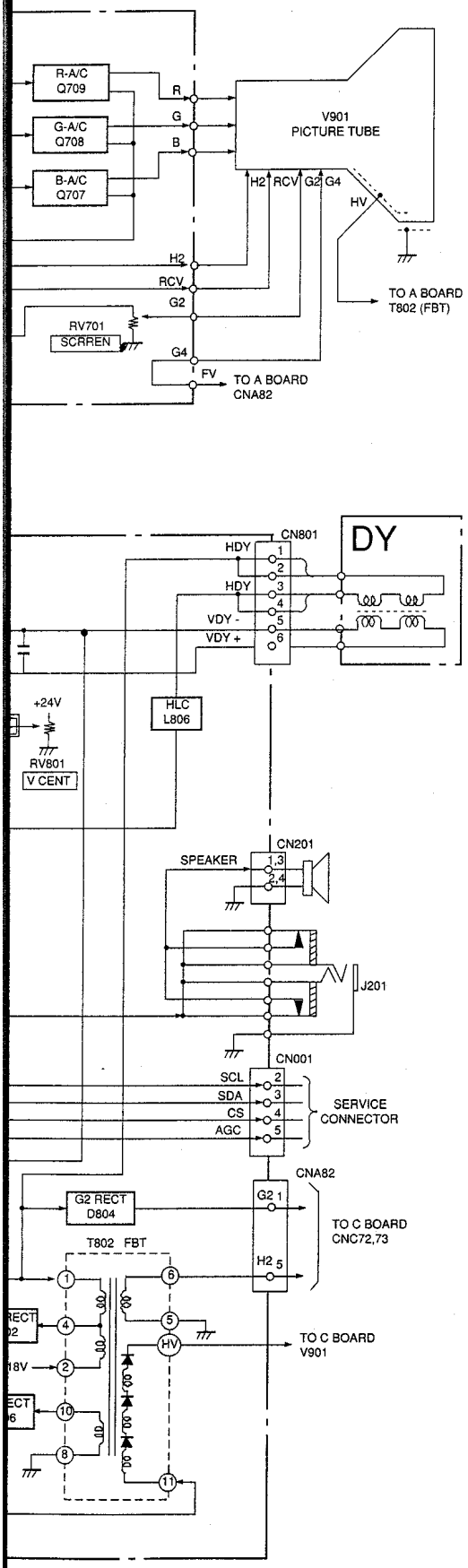

5-2. CIRCUIT

5-3. SCHEMA

Note :

- All capacitor
  50WV or les
  tantalums.
- All resistors
  k = 1000 , M
- Indication of
  electrical pov

Pitch : 5 mm
Rating electr

- : no
- : int
- : pa
- All variable
  B, unless oth
- : ea
- : ea
- : no

Note : The comp
are
part numl

Note : Les comp
marque
Ne les r
numero s

WAVEFORMS A BOARD

① 2.0 Vp-p (H)	② 1.0 Vp-p (H)	③ 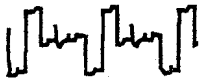 1.0 Vp-p (H)	④ PAL 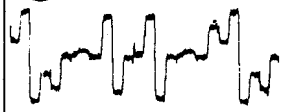 1.0 Vp-p (H)	④ SECAM/NTSC 1.2 Vp-p (H)
⑤ PAL 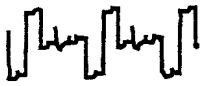 1.0 Vp-p (H)	⑤ SECAM 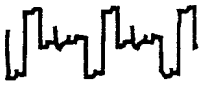 0.5 Vp-p (H)	⑤ NTSC 1.1 Vp-p (H)	⑥ PAL 1.4 Vp-p (H)	⑥ SECAM 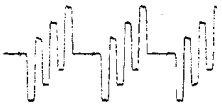 0.7 Vp-p (H)
⑥ NTSC 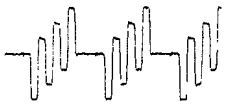 1.5 Vp-p (H)	⑦ 1.0 Vp-p (H)	⑧ 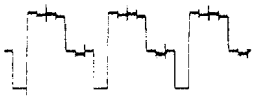 1.4 Vp-p (H)	⑨ 1.5 Vp-p (H)	⑩ 0.8 Vp-p (H)
⑪ 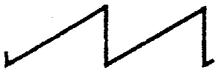 1.8 Vp-p (V)	⑫ 55 Vp-p (V)	⑬ 7.3 Vp-p (V)	⑭ 220 Vp-p (H)	⑮ 10 Vp-p (H)
⑯ 1.4KVp-p (H)	⑰ 51 Vp-p (H)	⑱ 24 Vp-p (H)		

SECTION 3
SET-UP ADJUSTMENTS

- The following adjustments should be made when a complete realignment is required or a new picture tube is installed.
- These adjustments should be performed with the rated power supply voltage, unless otherwise noted.

The Contrast and Brightness controls should be set as follows unless otherwise noted:

◑ CONTRAST control 80%
(or Normal by commander)

☼ BRIGHTNESS control 50%

Perform the adjustments in the following order:
1. Beam Landing
2. Convergence
3. Screen (G2), Drive, White Balance, Sub Colour and Sub Brightness.
4. Focus

Note: Test Equipment Required.
1. Colour bar/Pattern Generator
2. Degausser
3. DC Power Supply
4. Digital multimeter
5. Oscilloscope

Preparation:
- In order to reduce the influence of external magnetic forces on the picture tube, face the TV set in an easterly or westerly direction.
- Turn the power switch for the unit ON and erase the magnetic force using a degausser.

3-1. BEAM LANDING

Demagnetize with a degausser.
1. Input an all white raster signal from the pattern generator.
   CONTRAST } normal
   BRIGHTNESS }
2. Switch the raster signal of the pattern generator to Red.
3. Move the deflection yoke backward, and adjust with the purity control so that Red is at the centre and the Blue and Green are evenly spaced at the sides. see (Fig. 3-1 - 3-3)
4. Move the deflection yoke forward, and adjust so that the entire screen becomes Red. (Fig. 3-1)
5. Switch the raster signal to Blue and then Green to confirm the condition.
6. When the position of the deflection yoke has been determined, tighten it with the deflection yoke mounting screw.
7. When the landing at the corners is not correct, adjust by using disk magnets. (Fig. 3-4)

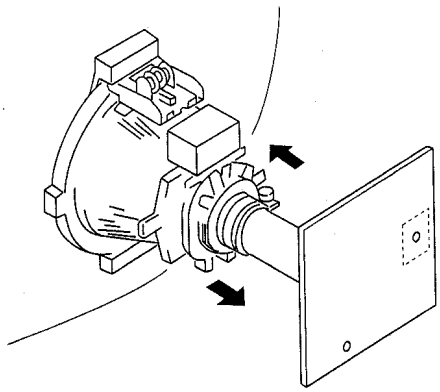

Fig. 3-1

Fig. 3-2

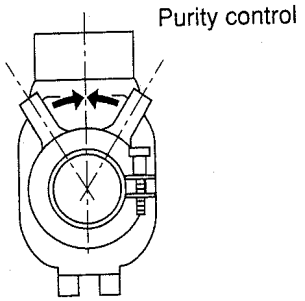

Fig. 3-3

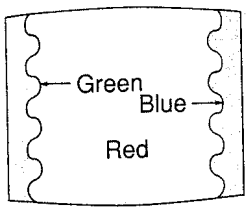

Fig. 3-4

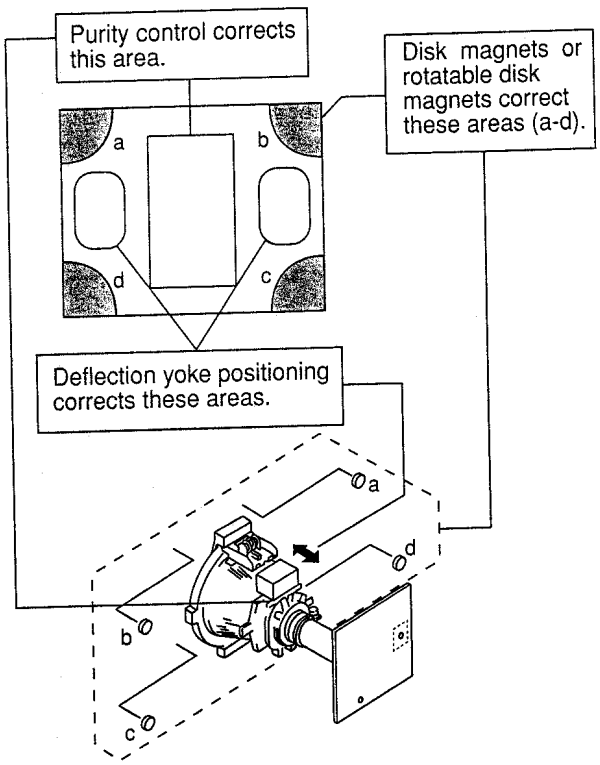

3-2. CONVERGENCE

Preparation:

- Before starting, perform FOCUS, H.SIZE, and V.SIZE adjustments.
- Set the BRIGHTNESS control to minimum.
- Input a dot pattern from the pattern generator.

(1) Horizontal and Vertical Static Convergence

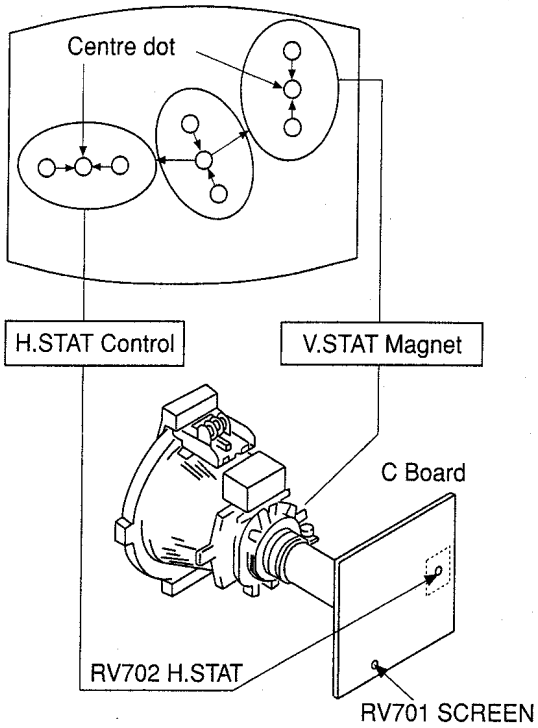

1. Adjust the H.STAT control to converge the Red, Green and Blue dots at the centre of the screen. (Horizontal movement)
2. Adjust the V.STAT magnet to converge the Red, Green and Blue dots at the centre of the screen. (Vertical movement)

- If the horizontal dots cannot coincide with variable range of the H.STAT convergence, adjust together with the V.STAT convergence while tracking.
  (Adjust the convergence by tilting the V.STAT convergence or by opening or closing the V.STAT convergence.)

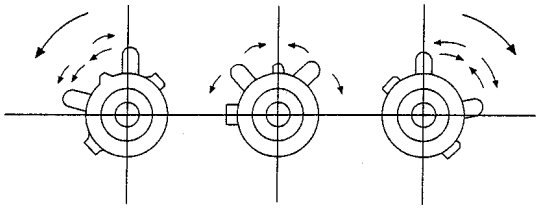

3. When the V.STAT magnet is moved in the direction of the (a) and (b) arrows, the Red, Green and Blue dots move as shown below.

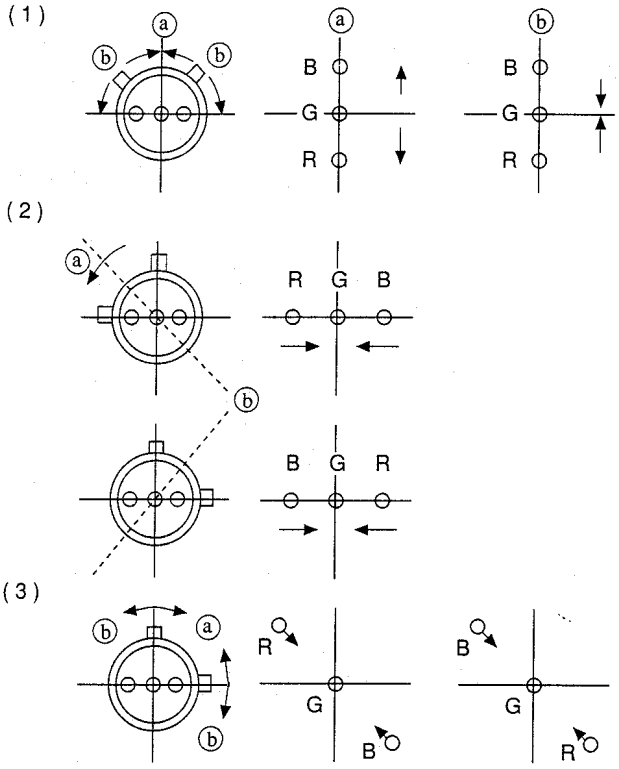

If the Red and Blue dots do not converge with the Green dots, perform the following steps.

1. Move the BMC magnet (a) to correct for insufficient H.static convergence.
2. Rotate the BMC magnet (b) to correct for insufficient V.static convergence.

In either case, repeat the Beam Landing Adjustment.

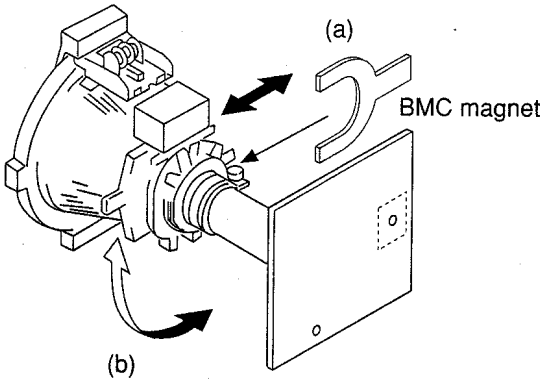

(2) Dynamic Convergence Adjustment

Preparation:

- Before starting, perform the Horizontal and Vertical static convergence adjustment.

1. Slightly loosen the deflection yoke screw.
2. Remove the deflection yoke spacers.
3. Move the deflection yoke for best convergence as shown below.
4. Tighten the deflection yoke screw.
5. Install the deflection yoke spacers.

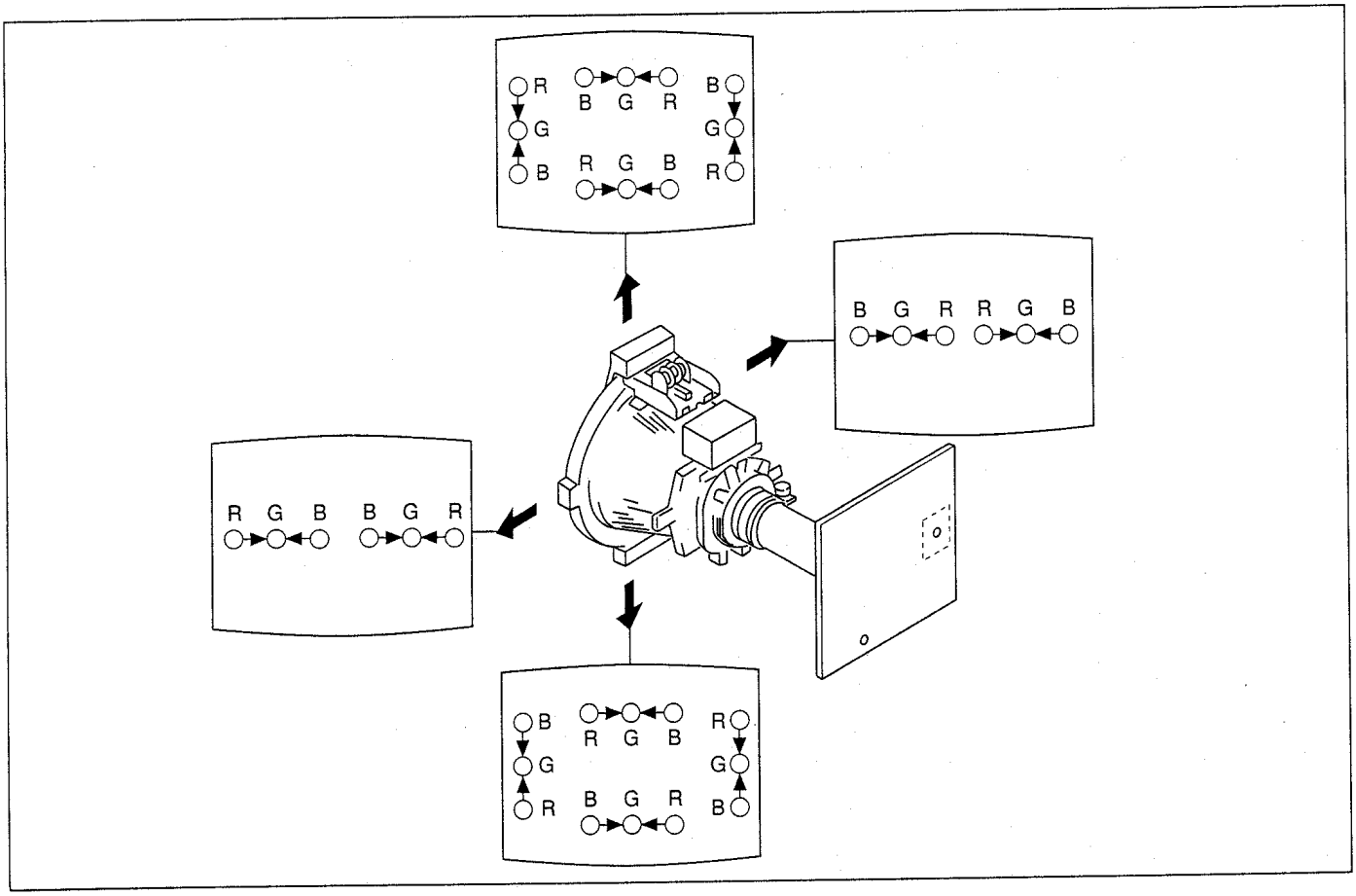

(3) Screen-corner Convergence.

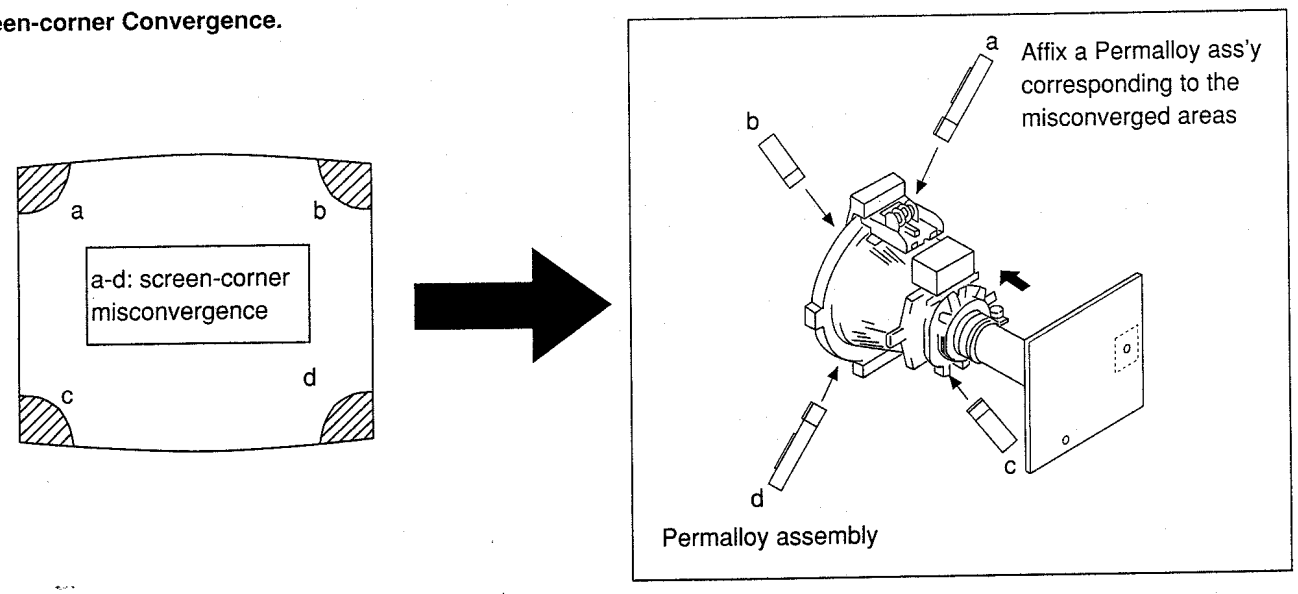

3-3. SCREEN (G2), DRIVE, WHITE BALANCE, SUB COLOUR and SUB BRIGHTNESS.

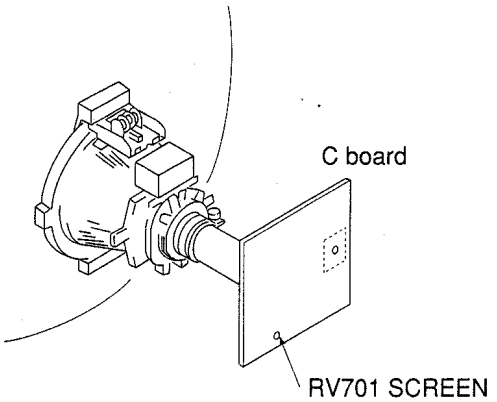

Screen (G2) setting

1. Input a 0 IRE (Black Level) signal from the pattern generator.
2. Enter into the Service Mode "Test""Test" and 38.
3. Adjust RV701 until the Down arrow is displayed.
4. Adjust RV701 until the Down arrow just disappears.
5. Press the TV Button on the Remote Commander to store the data.

Drive Level

1. Input a Video signal containing a small area of 100% white on a black background.
2. Connect an oscilloscope to Pin (10) of J701 (R OUT) on the C Board.
3. Set the Picture to maximum using "Test""Test" and 01.
4. Enter into the Service mode (Adjust Menu).
5. Using the Blue and Green buttons select "RED HWB".
6. Using the Red and Yellow buttons on the Remote Commander adjust until the oscilloscope waveform has an amplitude of 85V.

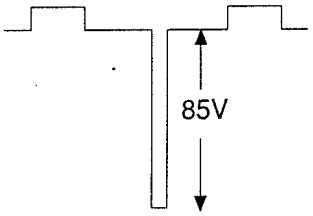

White Balance Adjustment

1. Input an all white pattern from the pattern generator.
2. Adjust the Colour and Brightness controls to the standard level.
3. Enter into the Service Mode.
4. Adjust the Green HWB and Blue HWB so that the White Balance becomes optimum.

Sub Colour Adjustment

1. Input a PAL colour bar pattern from the pattern generator.
2. Connect an oscilloscope to Pin (8) of J701 (B OUT) on the C Board.
3. Enter into the Service Mode "Test""Test" and 22.
4. Using the Red and Yellow buttons on the Remote Commander adjust until the oscilloscope waveform becomes as follows :

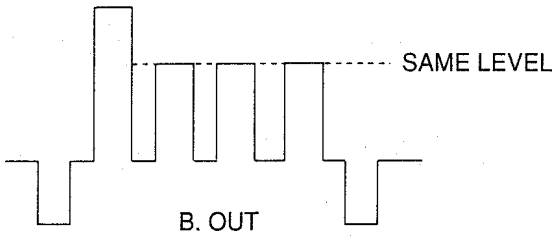

Note : If the TV is able to receive PAL and SECAM transmissions, repeat the above procedure using a Secam colour bar signal.

Sub Brightness Adjustment

1. Input a Philips pattern from the pattern generator.
2. Enter into the Service Mode "Test""Test" and 23.
3. Using the Red and Yellow buttons on the Remote Commander adjust until the 0 IRE of the grey scale and the cut off are only slightly visible on the screen.

3-4. FOCUS

1. Receive a television broadcast signal.
2. Normalize the picture setting.
3. Adjust the focus control on the flyback transformer for the best focus at the centre of the screen.
   Bring only the centre area of the screen into focus, the magenta-ring appears on the screen. In this case, adjust the focus to optimize the screen uniformly.

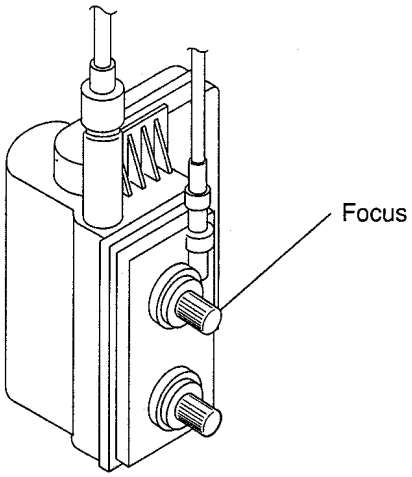

SECTION 4
CIRCUIT ADJUSTMENTS

4-1. ELECTRICAL ADJUSTMENTS

Service adjustment to this model can be performed with the supplied Remote Control Commander RM-836.

HOW TO ENTER INTO SERVICE MODE

1. Turn on the main power of the set and enter into stand-by mode.
2. Press the following sequence of buttons on the Remote Control Commander.

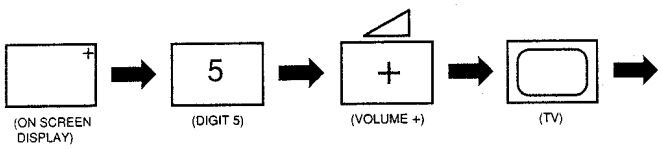

"TT-- " will appear in the top right corner of the screen Other status information will also be displayed.

3. Press the MENU button on the Remote Commander to obtain the menu on the screen.

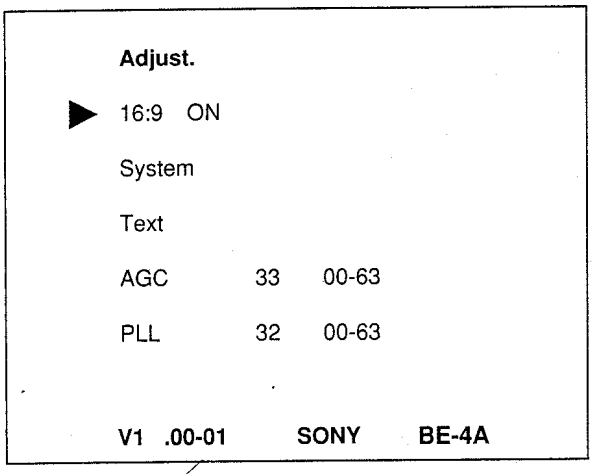

Software version

4. Press the Blue (Next) or Green (previous) buttons to select the adjustment item from the table.
5. Press the Yellow (+) or Red (-) buttons to change the data as required.
6. Turn off the power to quit the service mode when adjustments are completed.

Range of adjustments available from the on screen menu system.

Adjustment	Set	Range
16:9 Off	Select	ON/OFF
System	Select	BG-L, BG-DK UK, Eire, BG
Text	Select	EAST/WEST
AGC	Adj.	00 - 63
PLL	Adj.	00 - 63
B&W Delay	Adj.	00 - 63
Ver Size	Adj.	00 - 63
Ver, Breath	00	00 - 63
Par, Ampl	00	00 - 63
Par, Tilt	32	00 - 63
V, Linear	Adj.	00 - 63
Corn, corr	00	00 - 63
V, Cen or EW	Adj.	00 - 63
V, Position	42	00 - 63
H, Centre	Adj.	00 - 63
Blue HWB	Adj.	00 - 63
Green HWB	Adj.	00 - 63
Red HWB	Adj.	00 - 63

4-2. TEST MODE 2:

TT -- Mode is available by pressing the Test button twice, O.S.D 'TT --' appears. The functions described below are available by pressing two digits. To release the 'TT --' mode, press 0 twice, press 'TEST' , press 'TV' or switch the TV into Stand-by mode.

00	Switch 'TT--' Mode off.
01	Set picture level to maximum.
02	Set picture level to minimum.
03	Set volume to 35%.
04	Set volume to 50%.
05	Set volume to 65%.
06	Set volume to 80%.
07	Ageing condition (picture max., brightness max.).
08	Shipping condition (Analog values are RESET to factory setting, Prog 1 is selected, TT--mode switched off, Vol = 35%).
09	Dummy.
10	No function.
11	Dummy
12	Text Picture Level Offset (Enable/Disable)
13	Select Odd / Even field for Non-interlaced teletext.
14	Select Interlaced / Non-interlaced teletext display.
15	Read factory setting from ROM to NVM - Reads Volume, Brightness, Picture, Hue, Sharpness and Colour values from ROM to the actual used values (Last Power Memory).
16	No function
17	Enable / Disable Sharpness Operation.
18	Enable / Disable Teletext Operation.
19	Enable / Disable NTSC Operation.
20	No function.
21	Sub Picture.
22	Sub Colour (Pal / Secam Different Stores)
23	Sub Brightness.
24	Destination System BG/L.

25	Destination Systems BG/L.
26	Destination Systems I.
27	Destination System I/I'.
28	Destination BG only.
29	Dummy.
30	No function.
31-32	Dummy.
33	Auto AGC Adjust.
34	Auto PLL Adjust.
35-37	Dummy.
38	Enter G2 adjustment mode.
39	Dummy.
40	No function.
41	Re-initialise NVM.
42	Dummy.
43	Re-initialise Geometry settings.
44-47	Dummy
48	Set NVM testbyte to 44h in NVM.
49	Erase NVM testbyte
50	No function.

Note : For Test Modes 41 - 50, it is necessary to ensure that the TV is set to Prog 59.

IF ADJUSTMENT (AUTOMATIC)

1. Input a 38.9 MHz 100dBμ CW signal at the IF Out injection point.
2. Enter into service mode and press 34.
3. Connect a digital voltmeter to IC101 pin (23).
4. Check AFT 2.5V ±0.3V dc.
5. Press '00' on the Remote Commander.

SYSTEM L ADJUSTMENT (French Models)

1. Input a 33.9MHz 100dBμ CW signal at the IF Out injection point.
2. From the On Screen Menu set System to L band 1.
3. Connect a digital voltmeter to IC101 pin (23).
4. Adjust RV102 AFT for 2.5V ±0.3V dc.

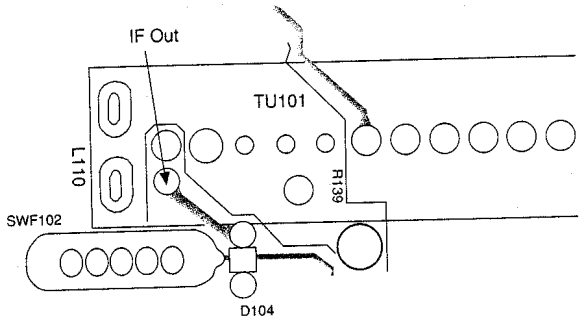

- A Board Print Side -

AGC ADJUSTMENT

1. Receive an off-air signal.
2. Enter into the Service adjust menu and select AGC.
3. Adjust the data using the Red and Yellow buttons on the Remote Commander so that there is no snow or cross - modulation visible on the screen.
4. Change the receiving off-air channel, and confirm the above status.

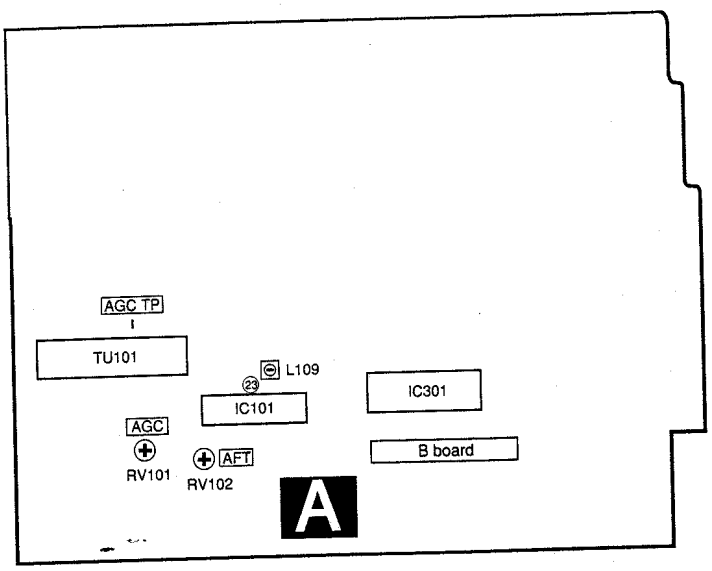

- A Board Component Side -

DEFLECTION SYSTEM ADJUSTMENT

1. Enter into the service mode.
2. Using the Blue or Green buttons select the Adjust item.
3. Press the Yellow button to enter the adjustment submenu.
4. Select and adjust each item in order to obtain the optimum image.

See Note on page 22

Adjustment	Set	Range
VERT, AMPL	Adj.	00 - 63
VER, BREATH	00	00 - 63
PAR, AMPL	00	00 - 63
PAR, TILT	32	00 - 63
V, LINEAR	Adj.	00 - 63
CORN, CORR	Adj.	00 - 63
V, CENTRE	Adj.	00 - 63
V, POSITION	42	00 - 63
H, CENTRE	Adj.	00 - 63

VERT, AMPL

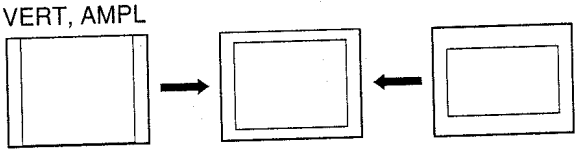

V, LINEAR

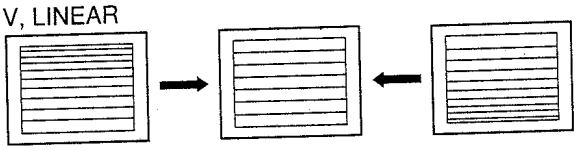

V, CENTRE

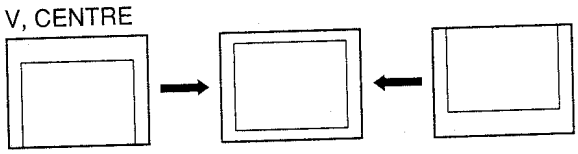

H, CENTRE

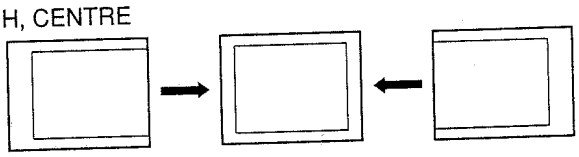

Fit the link as required to obtain the correct horizontal picture size.

4-3. BE-4A SELF DIAGNOSTIC SOFTWARE

The identification of errors within the BE-4A chassis is triggered in 1 of 2 ways :- 1: Bus busy or 2: Device failure to respond to I^2C. In the event of one of these situations arising the software will first try to release the Bus if busy (Failure to do so will report with a continuous flashing LED) and then communicate with each relevant device in turn to establish if a device is faulty. If a device is found to be faulty the relevant device number will be displayed through the LED by a Series of flashes which must be counted (See Table 1), Non fatal errors are reported with this method.

If a fatal error is found, the set will simply stay in whichever state it was when the error occurred, but if a non fatal error occurs the set will try to continue to operate.

Table 1

No of Flashes	Meaning
2	IC301 not acknowledging I^2C transmission, NVM OK.
3	IC301 FAULT (Not OK) - flags
4	IC301 - No H Flyback
5	IC301 - Stack Overflow.
6	Overvoltage / Overcurrent Protection (Pin 52) high.
7	IC002 not acknowledging I^2C transmission, IC301 OK.
8	IC002 and IC301 - No I^2C acknowledgment.
9	General I^2C Error (SDA or SCL being held low) (IC301, IC001, IC002, CN001)

Flash Timing Example : e.g. error number 3

Stby LED

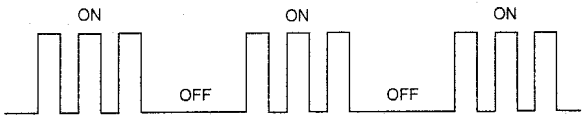

Note : Deflection System Adjustments should not be carried out whilst using an NTSC (60Hz) signal, or if the signal is unlocked.

21 pin connector (1)

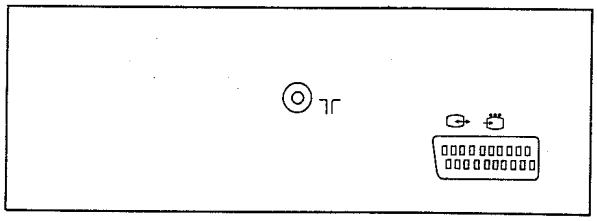

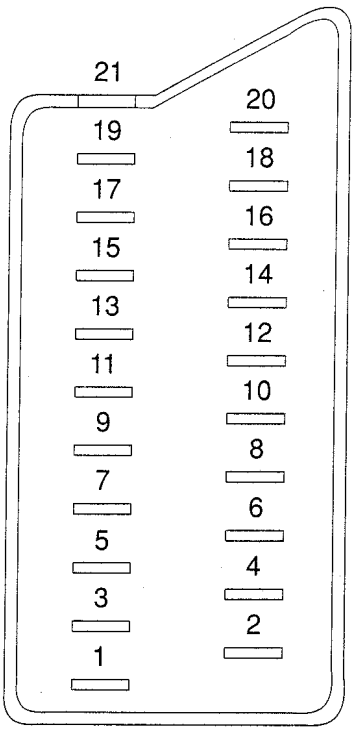

Pin No.	1	2	4	Signal	Signal Level
1	○	○	○	Audio output B (Right)	Standard level : 0.5V rms Output impedance : Less than 1k ohms*
2	○	○	○	Audio input B (Right)	Standard level : 0.5V rms Output impedance : More than 10k ohms*
3	○	○	○	Audio output A (Left)	Standard level : 0.5V rms Output impedance : Less than 1k ohm*
4	○	○	○	Ground (Audio)	
5	○	○	○	Ground (Blue)	
6	○	○	○	Audio input A (Left)	Standard level : 0.5V rms Output impedance : Less than 10k ohm*
7	○	●	●	Blue input	0.7 ± 3dB, 75 ohms, positive
8	○	○	○	Function select (AV control)	High state (9.5 - 12V) : Part mode Low state (0 - 2V) : TV mode Input impedance : More10k ohms Input capacitance : Less than 2nF
9	○	○	○	Ground (Green)	
10	○	○	○	Open	
11	○	●	●	Green	
12	○	○	○	Open	
13	○	○	○	Ground (Red)	
14	○	○	○	Ground (Blanking)	
15	○	—	—	Red input	0.7 ± 3dB, 75 ohms, positive
	—	○	○	(S signal) croma input	0.7 ± 3dB, 75 ohms, positive
16	○	●	●	Blanking input (Ys signal)	High state (1 - 3V) Low state (0 - 0.4V) Input impedance : 75 ohms
17	○	○	○	Ground (Video output)	
18	○	○	○	Ground (Video input)	
19	○	○	○	Video output	1V ± 3dB, 75ohms, positive sync : 0.3V (-3 + 10dB)
20	○	—	—	Video input	1V ± 3dB, 75ohms, positive sync : 0.3V (-3 + 10dB)
	—	○	○	Video input Y (S signal)	1V ± 3dB, 75ohms, positive sync : 0.3V (-3 + 10dB)
21	○	○	○	Common ground (plug, sheild)	
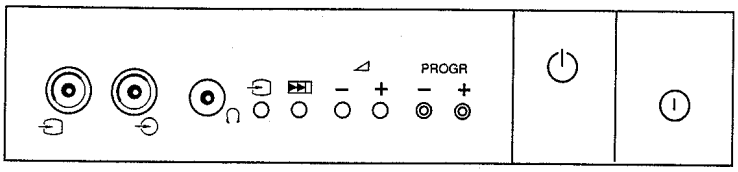
○ Connected ● Not Connected (Open) * at 20Hz - 20kHz