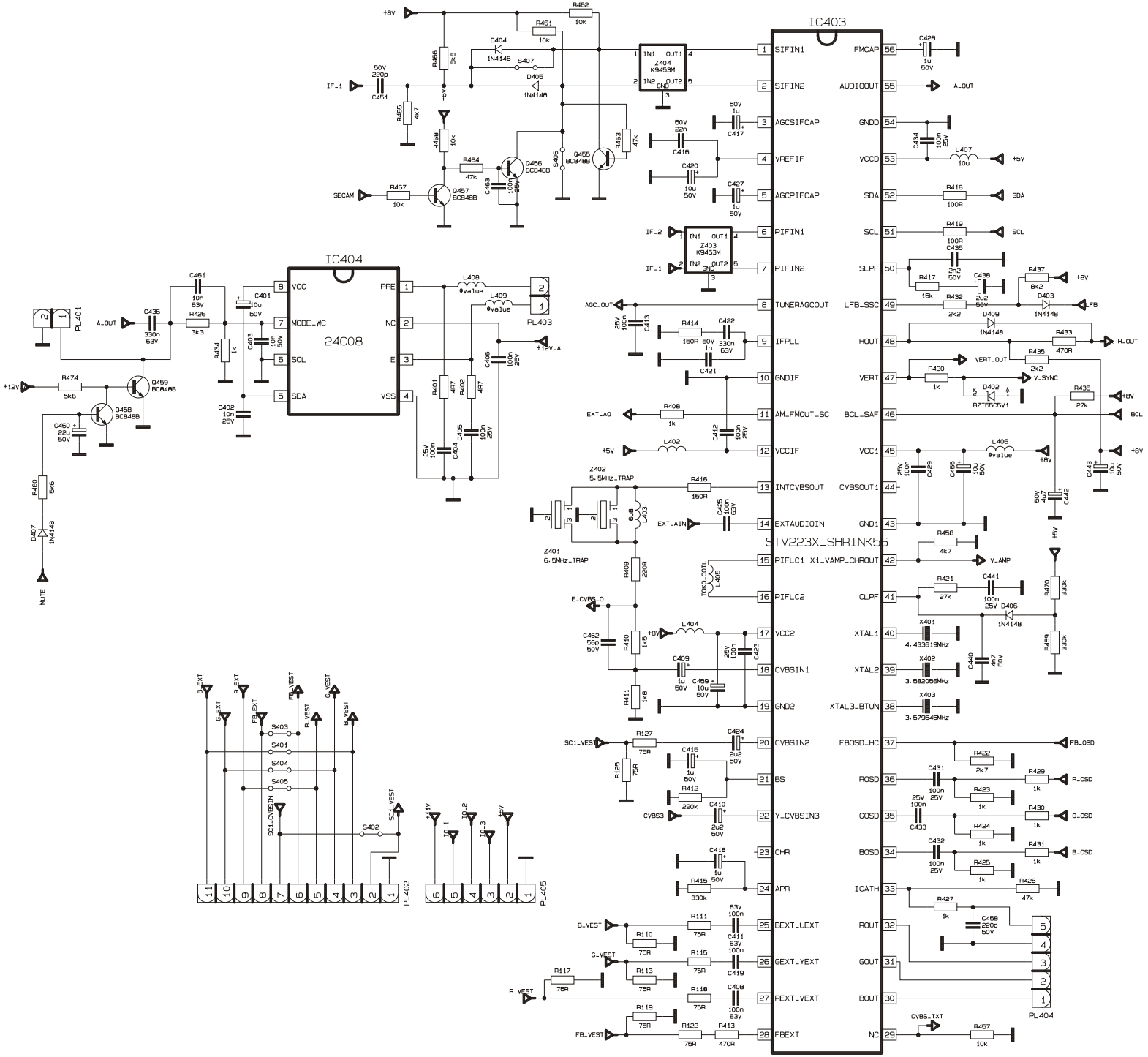
IC403
STV223X_SHRINK56
IC404
24C08
SIFIN1
SIFIN2
AGCSIFCAP
VREFIF
AGCPIFCAP
PIFIN1
PIFIN2
TUNERAGCOUT
IFPLL
GNDIF
AM_FMOUT_SC
VCCIF
INTCVBSOUT
EXTAUDIOIN
PIFLC1
PIFLC2
VCC2
CVBSIN1
GND2
CVBSIN2
BS
Y_CVBSIN3
CHR
APR
BEXT_UEXT
GEXT_YEXT
REXT_VEXT
FBEXT
FMCAP
AUDIOOUT
GNDD
VCCD
SDA
SCL
SLPF
LFB_SSC
HOUT
VERT
BCL_SAF
VCC1
CVBSOUT1
GND1
X1_VAMP_CHROUT
CLPF
XTAL1
XTAL2
XTAL3_BTUN
FBOSD_HC
ROSD
GOSD
BOSD
ICATH
ROUT
GOUT
BOUT
NC
Z404
K9453M
Z403
K9453M
Z402
5.5MHz_TRAP
Z401
6.5MHz_TRAP
PL401
PL402
PL403
PL404
PL405
+8V
+5V
+12V
+12V_A
IF_1
IF_2
SECAM
A_OUT
AGC_OUT
EXT_AO
EXT_AIN
E_CVBS_O
SC1_VEST
CVBS3
B_VEST
G_VEST
R_VEST
FB_VEST
H_OUT
VERT_OUT
V_SYNC
BCL
V_AMP
FB_OSD
R_OSD
G_OSD
B_OSD
CVBS_TXT
MUTE
S403
S401
S404
S405
S402
S407
S406
Q455 BC848B
Q456 BC848B
Q457 BC848B
Q458 BC848B
Q459 BC848B
D402 BZT55C5V1
D403 1N4148
D404 1N4148
D405 1N4148
D406 1N4148
D407 1N4148
D409 1N4148
X401 4.433619MHz
X402 3.582056MHz
X403 3.579545MHz