11PW36-4
18/12/2001
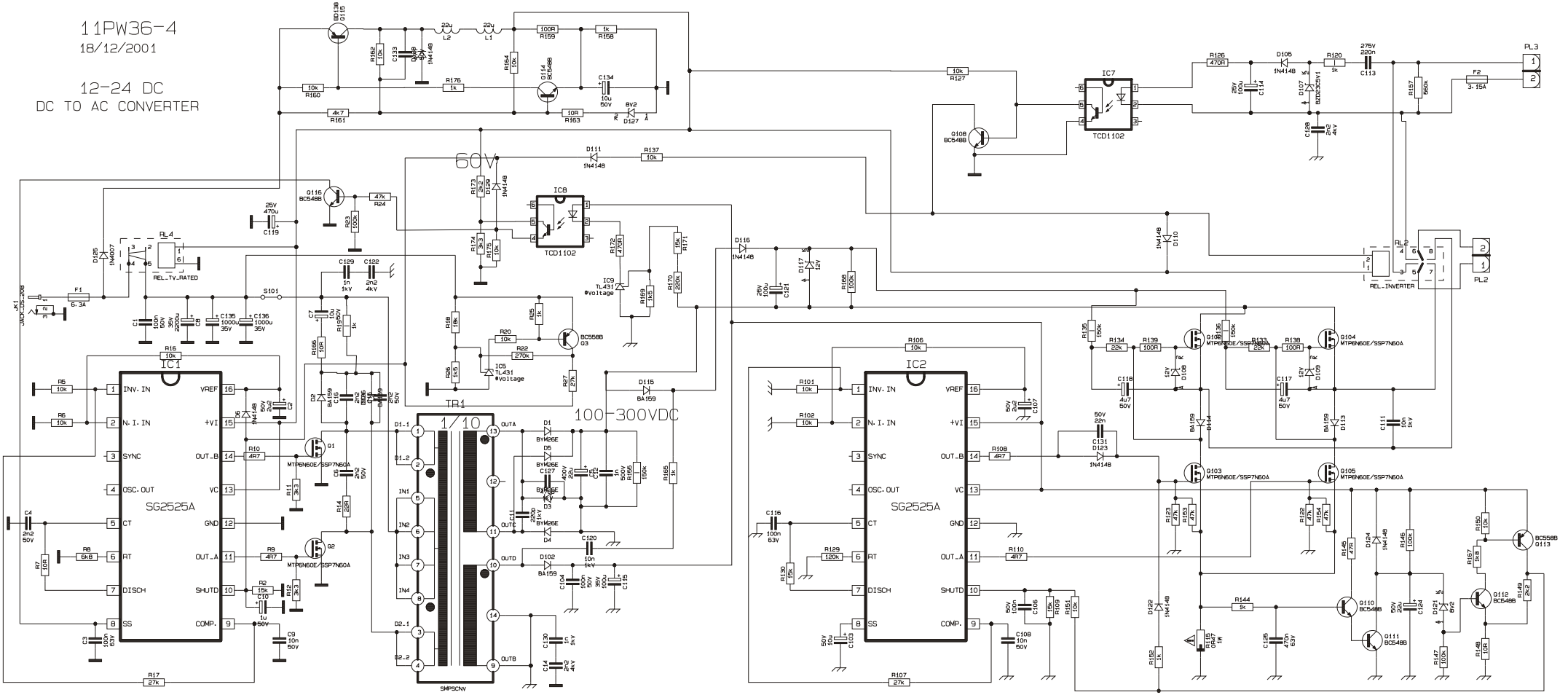
12-24 DC
DC TO AC CONVERTER